CONTENTS

1	GENERAL			1
1.1	910292	Overall signal lines.	./5	1
1.2	910293	Overall power supply.	./5	2
1.3	910294	Internal crate interconnections	./5	3
2	POWER SUPPLIES.			4
2.1	910605	Power supply module wiring.	./6	4
2.2	854606	Power supply line moniter	./1	5
2.3	854590	Regulator one	./2	6
2.4	854658	Regulator two	./2	7
2.5	854670	Regulator three	./2	8
2.6	853534	Record display H.T.supplies	./6a.	9
2.7	853450	Scintillator bias	./2	10
2.8	853604	12 K.V. supply module	./2	11
2.9	853360	EHT.backplane assembly.	./4a.	12
2.10	853360	EHT.backplane circuit	./3a.	13
2.11	910295	EHT.backplane connections	./2	14
2.12	853376	EHT.interface	./8	15
2.13	853274	P.M.supply(also used with cathodo)	./3	16
2.14	853564	Heater control.	./3	17
2.15	853568	Heater inverter	./1b.	18
2.16	853312	EHT control	./1	19
2.17	853586	EHT inverter.	./1a.	20
2.18	853306	Inverter/Regulator.	./1	21
2.19	853566	Beam current pcb.	./2	22
2.20	852472	EHT box	./3	23
2.21	851507	Feed backboard.	./4	24
2.22	853982	High/Low K.V.pcb.	./2	25
2.23	853410	EHT gun supply status	./4	26
2.24	854558	Coutant psu smoothing	./2	27
3	ELECTRON OPTICS			28
3.1	853974	E.O.backplane	./2	28
3.2	853572	E.O.interface	./9	29
3.3	853372	C1/C2 control/Gun align	./4	30
3.4	853408	C3 control.	./16.	31
4	SCANNING.			32
4.1	853392	Scan generator.	./13a	32
4.2	853378	External scan interface	./11.	33
4.3	853382	Scan processor.	./5	34
4.4	853388	S.A.C.P	./5	35
5	VIDEO			36
5.1	853504	Video Processor(1).	./6	36

Total Number of Sheets in this Document is 149

6	IMAGE PROCESSOR		37
6.1	853562 I.P.crate backplane	./1	37
6.2	853368 Input board	./8a	38
6.3	854368 Grey processor	./11	39
6.4	854366 Digital image store(1)	./6b	40
6.5	854370 Scan address	./10	41
6.6	855106 Mono display mixter	./3	42
6.7	853402 Control display RAM	./3	43
6.8	854364 T.V.timing and histogram	./9	44
6.9	854458 Autofocus/line buffer	./4	45
7	SYSTEM CONTROL		46
7.1	853420 VME crate I/f	./6	46
7.2	855162 User I/f	./2a	47
7.3	853644 Control panel pcb1	./3	48
7.4	853646 Control panel pcb2	./2	49
7.5	853648 Control panel pcb3	./2	50
7.6	853650 Control panel pcb4	./3	51
8	RECORD DISPLAY		52
8.1	853592 HRRU Scan and control	./10	52
8.2	852720 HRRU Z amp	./5	53
8.3	852718 HRRU Dynamic focus	./1a	54
9	PLINTH		55
9.1	855124 Head amplifier	./1	55
9.2	910369 Vacuum control overall	./3	56
9.3	855530 Vacuum control pcb	./2a	57
9.4	854096 Vent valve D.C.Supply	./2	58
10	OPTIONS		59
10.1	853548 Video processor 2	./5	59
10.2	854272 External mode pcb	./1	60
10.3	854440 EDX/WDX select	./1	61
10.4	854426 Link temp pcb	./3	62
10.5	853528 Stepper conrol(motor type)	./8	63
10.6	853946 Stepper driver(motor stage)	./1	64
10.7	855108 Colour mixer	./3	65
10.8	853992 SCA Control	./2	66
10.9	853972 SCA Analogue	./3	67
10.10	852207 Ion pump overall	./1	68
10.11	852173 Ion pump rectifier	./5	69
10.12	854252 High res phase loop	./1	70
10.13	854250 High res display mixer	./4	71
10.14	717605 Baffle valve	./4	72
10.15	854674 Digital image store	./1	73
10.16	855368 Expansion pcb	./3	74
10.17	717747 Beam blanking control box	./4	75
10.18	852466 Beam blanking pcb	./3	76
10.19	717531 Viewing window	./7	77
10.20	855380 Scan Generator	./1	78
10.21	CD49-10 4QBSD Main control	./2	79
10.22	CD49-14 4QBSD Head amp	./1	80
11	OBSOLETE		81
11.1	910236 E.O supply overall	./7	82
11.2	853412 PSU Module 28v 5a	./1	82

Contents

11.3	853414	PSU Module 20v 3a	./1	83
11.4	853416	PSU Module 20v 6a	./1	84
11.5	853418	PSU Module 5v 3a	./2	85
11.6	852298	Head amp.	./2	86
11.7	854240	Vac control daughter.	./1	87
11.8	854108	Image processor Mains sync. . . .	./1	88
11.9	854048	User I/f.	./7a. . . .	89
11.10	853634	Autofocus/line buffer	./7	90
11.11	853404	Digital image store	./3	91
11.12	853438	Grey processor.	./1	92
11.13	853442	Scan address.	./8	93
11 14	853444	TV Timing and histogram	./8	94
11.15	853530	Mono display mixer.	./5	95
11.16	854360	Mono display.	./4a. . . .	96
11.17	853912	Colour mixer.	./5	97
11.18	854362	Colour mixer.	./5	98
11.19	854270	PIA buffer.	./3	99
11.20	854424	Fan fail detector	./3	100
11.21	853640	Vac control	./9a. . . .	101
12	CABLES.			102
12.1	910314	Cable list.	./6	102

NOTE: A SUFFIX USED AT THE END OF A CABLE IDENT DENOTES WHAT LOCATION THE CABLE IS CONNECTED
SEE BLOCK DIAGRAM A0940486
eg: CABLE48 - OVERALL REFERENCE NUMBER TO DESCRIBE THE CABLE CONTAINED IN THE CABLE BIBLE.
SK104S - DESIGNATES THAT END OF THE CABLE TO THE ED CRATE AND PLUGS INTO THE C3 LENS PCB MODULE
NO SUFFIX ie PL818 IMPLIES THAT END OF THE CABLE CONNECTS TO A PANEL OR BACKPLANE
FOR SIGNAL DISTRIBUTION SEE DRWG AO-910292
FOR SINGLE CRATE INTERCONNECTIONS SEE DRWG A0-910294

PLOTTER
CONSOLE REAR PANEL 700-799
PART OF PANEL "D" SK721
CABLE193 TO HRRU CHASSIS
XDRG
CYLOUR
Dual Floppies
PSU
Image Processor Crate 200-
IMAGE PROCESSOR COOLING FANS
TO ED PSU EARTH BAR
USER INTERFACE PCB 700-
ED Crate 100-
VME BACKPLANE
ED BACKPLANE
C3 Power
C1/C2 Power
Scan Power
EDPSU
OPTION SCH CONTROL
SCH AVAILABLE
SCH SUPPLY OPTION
C1/C2 LENS
SCAN
VAC CONTROL
RECORD PSU
C3 LENS
ED POWER SUPPLY CRATE 800-
MONITORS SK11 117V
POWER CONTROL SK13
SK12 117V
HRRU
FANS
TIMER RELAY 24VAC
TO EARTH BAR
PART OF CABLE95
LCD displays & Control Panel
CONTROL PANEL PCB2
MAINS SUPPLY
FAN FAIL (700G)
REAR OF CONSOLE
S360 FAN
LINK OPTIONAL FANS (115V)
FOR OVERALL DETAIL OF CONTROL PANEL AND USER INTERFACE SEE DRWG A0-910294
BEAM BLANK OPTION
GUN
Braid
Top Gun Align Coils
Bottom Gun Align Coils
C1 Lens
C2 Lens
Stigmator Coils
Microshift Coils
Top Scan Coils
Bottom Scan Coils
C3 Lens
CHAMBER
VENT VALVE
VAC LOGIC
EARTH BUS
CHASSIS
ION PUMP S/354
TO TURBO CASE
STAR
ED PSU EARTH BAR
STAGE CONTROL X,Y,Z DRIVERS ASSY 500-
PSU
EHT CHASSIS
CONSOLE CHASSIS
RECORD UNIT CHASSIS
ED CRATE
OPTION
CATHODE
EHT Assy 900-950
(From filter)
PSU
SCINT BIAS
REG MT SUPPLY
OPTION MODULE 12KV
RECORD PSU CRATE F
12KV DYNAMIC FOCUS
Z AMPLIFIER
SCAN AND CONTROL
HRRU ASST 500-
TO CONSOLE CHASSIS
ION PUMP
LINK TEMP PCB 500-

© CAMBRIDGE INSTRUMENTS LIMITED 1986

WARNING : CAD PRODUCED CIRCUIT DO NOT HAND MODIFY

	186/98	186/98	H.H	H.H	0-0
	—	—	J.B	J.B	CHKD
L1	P.J	P.J	—	—	APP
P.F	P.F	P.F	P.F	P.F	PCA
27-1-88	23-9-87	9-9-87	23-1-87	12-1188	DATE
24041	24148	23888	30765	DIETTAL	MOD NO
5	4	3	2	1	ISSUE

TITLE
S360 OVERALL POWER SUPPLY WIRING DIAGRAM

	DATE
0-0 H.H	2-9-86
CHKD J.B	12-11-86
APP —	
PCA P.F	12-11-86
PCB	

CAMBRIDGE INSTRUMENTS LIMITED

CIRCUIT DIAGRAM No. AO - 910293
SHEET: 1 OF: 1

5

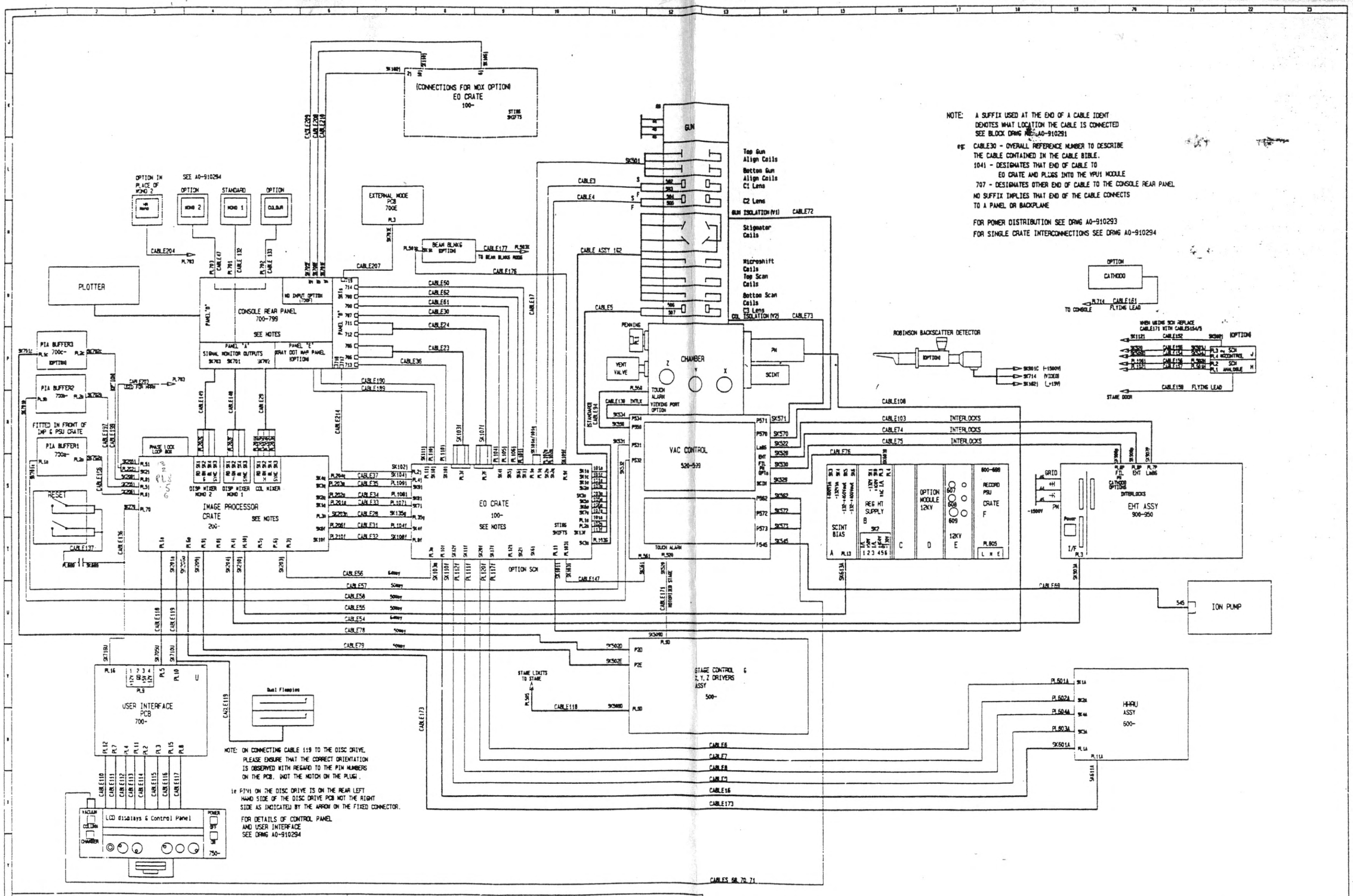

© CAMBRIDGE INSTRUMENTS LIMITED 1986

WARNING : CAD PRODUCED CIRCUIT DO NOT HAND MODIFY

27-1-86	23-9-87	9-9-87	23-1-87	12-11-86	DATE		
24841	24140	23000	30700	INITIAL	MOD NO		
5	4	3	2	1	ISSUE		

TITLE
S360 OVERALL SIGNAL LINES
WIRING DIAGRAM

		DATE
DRN	R.B.	1-9-86
CHKD		12-11-86
APP	—	
PCA	P.F	12-11-86
PED		

CAMBRIDGE INSTRUMENTS LIMITED

CIRCUIT DIAGRAM No. A0 - 910292

SHEET: 1 OF: 1

4

NOTE: A SUFFIX USED AT THE END OF A CABLE IDENT DENOTES WHAT LOCATION THE CABLE IS CONNECTED SEE BLOCK DIAGRAM A0 940486

eg: CABLE16 - OVERALL REFERENCE NUMBER TO DESCRIBE THE CABLE CONTAINED IN THE BIBLE
SK1101 - DESIGNATES THAT END OF THE CABLE TO THE EXTERNAL SCAN AMP PCB WITHIN THE EO CRATE
SK601A - DESIGNATES THAT END OF THE CABLE TO THE SCAN AND CONTROL PCB WITHIN THE HARU
NO SUFFIX IMPLIES THAT THE END OF THE CABLE CONNECTS TO A PANEL OR BACKPLANE

FOR OVERALL SIGNAL DISTRIBUTION SEE DRWG A0-910292.
FOR OVERALL POWER DISTRIBUTION SEE DRWG A0-910293.

CABLE No	IDENT TO	IDENT FROM
38	SK2049	SK2040
39	SK2039	SK2031
41	SK2041	SK2081
42	SK2051	SK2051
43	SK2046	SK2046
109	PL205L	PL205M
200	SK2031	SK2076
201	PPL	SK2011
202	PPL	SK2041

NOTE: EXTENDED VERSIONS OF CABLES: - EXT38 - EXT39 - EXT42 - EXT43 ARE SUPPLIED WITH EXTENDER CARD KIT.

THE FOLLOWING PCBs ARE OPTIONS:

HI RES DISPLAY
STORE BOARDS

100 - ELECTRON OPTICS CRATE ASSY
200 - IMAGE PROCESSOR CRATE ASSY
300 - IMAGE PROCESSOR EXTENSION CRATE ASSY
400 - ANCILLARIES UNIT
500 - PLINTH, COLUMN, VAC LOGIC, STAGE CRATE ASSY
600 - SCINTILLATOR CRATE, HARU ASSY.
700 - CONSOLE REAR PANEL, USER INTERFACE PCB.
750 - CONTROL PANELS 1, 2, 3, 4
800 - EO POWER SUPPLY
900 - GUN EHT CRATE ASSY

CABLE No	IDENT TO	IDENT FROM	
10	PL102a	PL104e	
11	PL103c	PL108c	
12	PL104e	SK 119f	
13	PL104c	SK118f	
14	PL105c	SK116f	
15	PL105a	PL115f	
25	PL101f	PL133g	
26	PL102f	PL134g	
27	PL106f	PL136g	
146	PL105f	PL111	
174	PL1041	PL107j	OPTION
178	PL1031	PL101k	OPTION
179	SK1021	SK102k	OPTION
181	PL102a	PL106a	
182	PL102c	PL110e	

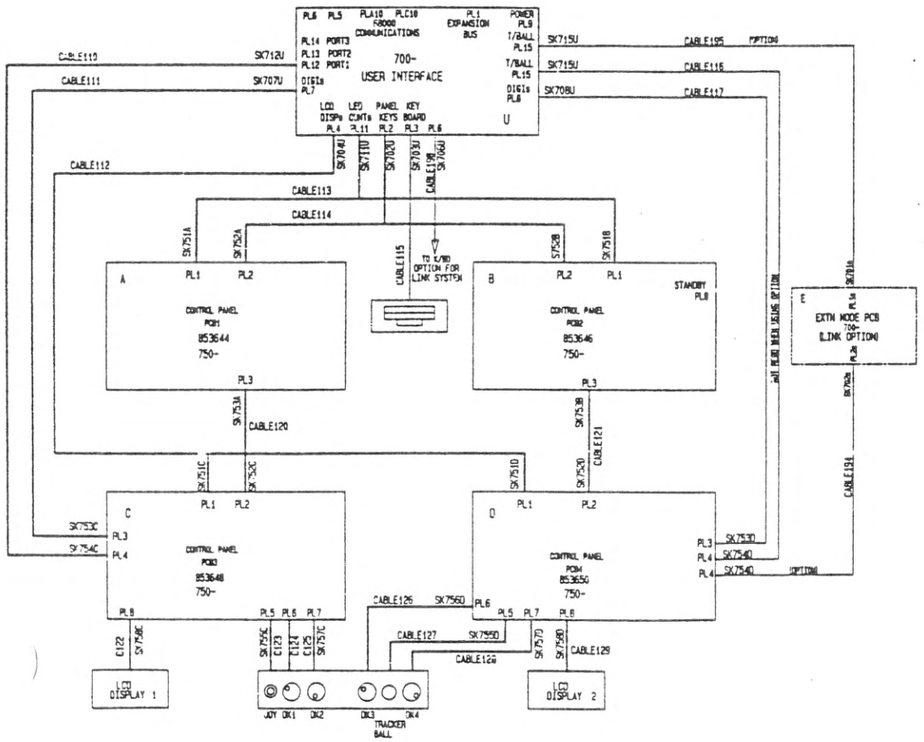

© CAMBRIDGE INSTRUMENTS LIMITED 1986

THIS DRAWING IS THE PROPERTY OF THE CAMBRIDGE INSTRUMENTS CO. LTD. WHICH INCLUDES CAMBRIDGE INSTRUMENTS LTD., U.K., CAMBRIDGE INSTRUMENTS GMBH, WEST GERMANY, CAMBRIDGE INSTRUMENTS SARL, FRANCE, AND CAMBRIDGE INSTRUMENTS INC, U.S.A. THIS DRAWING SHALL NOT BE COPIED OR REPRODUCED IN ANY FORM TO THOSE PURPOSES NOT BEING EXPRESSLY PERMITTED IN WRITING BY CAMBRIDGE INSTRUMENTS LIMITED.
IN THE U.S.A. THIS DRAWING IS LOANED WITH THE EXPRESSED AGREEMENT THAT THE DRAWING AND INFORMATION THEREON CONTAINED ARE THE PROPERTY OF CAMBRIDGE INSTRUMENTS INC. AND SHALL NOT BE REPRODUCED, COPIED, OR OTHERWISE DISPOSED OF WITHOUT OUR WRITTEN CONSENT AND SHALL BE USED IN SUCH A WAY AS NOT TO INTERFERE WITH THE RIGHTS OF INVENTORS OR PATENT REPRESENTATIVES THEREOF NOR FOR THE MAKING OF APPARATUS OR PLANTS THEREBY EXCEPT UPON WRITTEN AGREEMENTS OF CAMBRIDGE INSTRUMENTS INC. THEIR APPLICABLE SPECIFIC AS TO EACH CASE. THE ACCEPTANCE OF THIS DRAWING SHALL BE CONSTRUED AS AN ACCEPTANCE OF THE FOREGOING AGREEMENT

WARNING : CAD PRODUCED CIRCUIT DO NOT HAND MODIFY

W.F.	10/1/85	10/1/85	N.H.	N.H.	DRN	
—	P.J.	P.J.	—	—	CHKD	
P.C.	P.T.	P.T.	P.T.	P.T.	PCL	
27-1-86	23-6-87	9-6-87	23-1-87	13-11-86	DATE	
24641	24148	23888	30795	DRAWING	MOD NO	
5	4	3	2	1	ISSUE	

TITLE
S360 INTERNAL CRATE INTERCONNECTIONS

		DATE
DRN	N.H.	1-6-85
CHKD	J.H.	13-11-86
APP	—	
PCL	P.T.	13-11-86
MOD		

CAMBRIDGE INSTRUMENTS LIMITED

CIRCUIT DIAGRAM NO. A0 - 910294

SHEET: 1 OF: 1

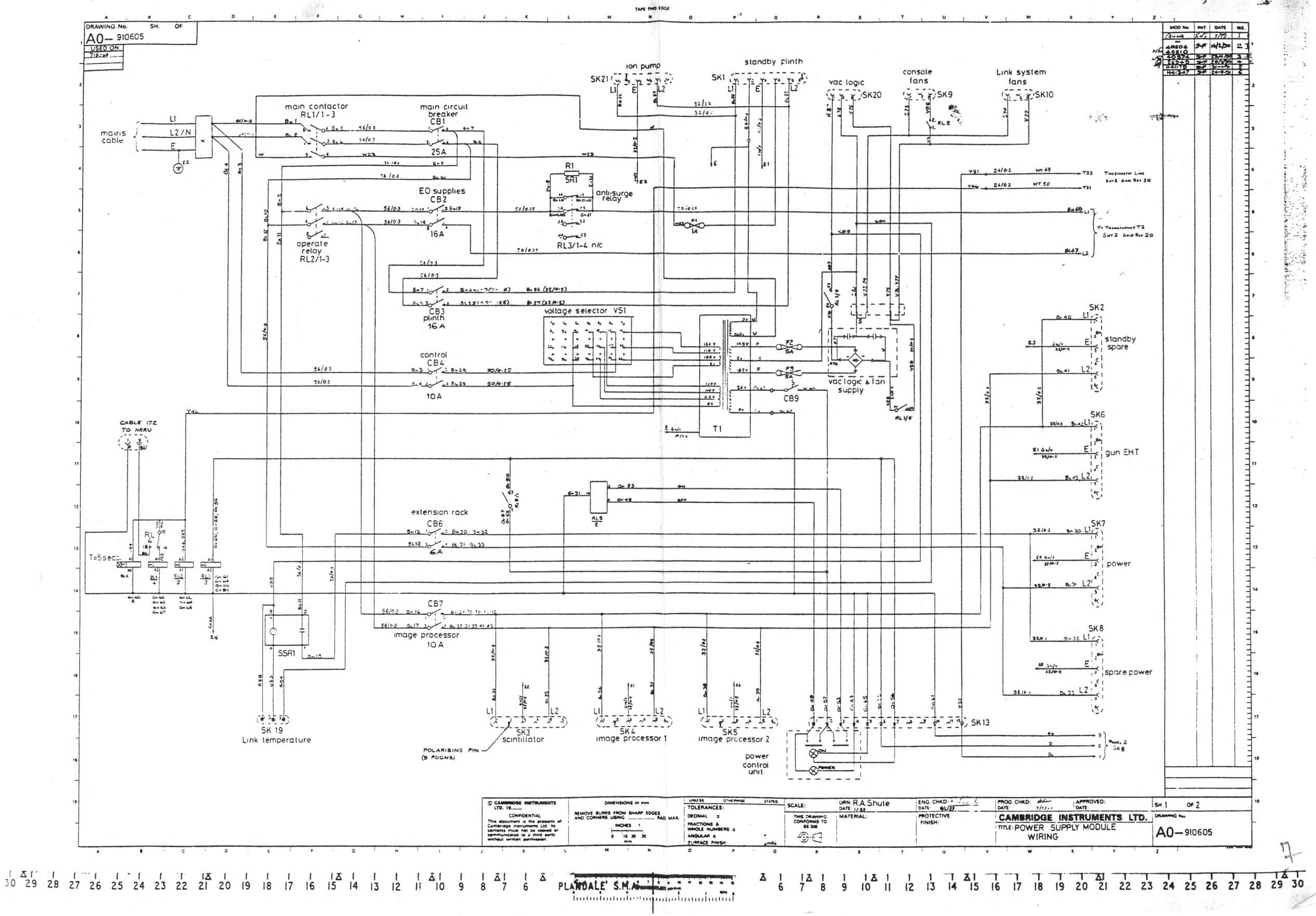

DRAWING No. SH. OF
A0– 910605
USED ON
716200
MOD No. INIT. DATE ISS.
ion pump
SK21
standby plinth
SK1
vac logic
SK20
console fans
SK9
Link system fans
SK10
mains cable
L1
L2/N
E
main contactor RL1/1-3
main circuit breaker CB1
25A
R1
5R1
anti-surge relay
RL3/1-4 n/c
EO supplies CB2
16A
operate relay RL2/1-3
CB3 plinth 16A
voltage selector VS1
control CB4
10A
T1
CB9
vac logic & fan supply
SK2
standby spare
SK6
gun EHT
SK7
power
SK8
spare power
CABLE 172 TO HRRU
T=5secs.
extension rack CB6
6A
CB7
image processor 10A
SSR1
SK 19 Link temperature
SK3 scintillator
POLARISING PIN (9 POSNS)
SK4 image processor 1
SK5 image processor 2
SK13
power control unit
ON
POWER
© CAMBRIDGE INSTRUMENTS LTD. 19
CONFIDENTIAL
This document is the property of Cambridge Instruments Ltd. Its contents must not be copied or communicated to a third party without written permission.
DIMENSIONS IN mm
REMOVE BURRS FROM SHARP EDGES AND CORNERS USING RAD MAX.
INCHES
TOLERANCES:
DECIMAL ±
FRACTIONS & WHOLE NUMBERS ±
ANGULAR ±
SURFACE FINISH:
SCALE:
THIS DRAWING CONFORMS TO BS 308
DRN: R.A.Shute
MATERIAL:
ENG. CHKD:
PROTECTIVE FINISH:
PROD. CHKD:
APPROVED:
CAMBRIDGE INSTRUMENTS LTD.
TITLE: POWER SUPPLY MODULE WIRING
SH 1 OF 2
DRAWING No.
A0–910605
PLANDALE S.M.A.

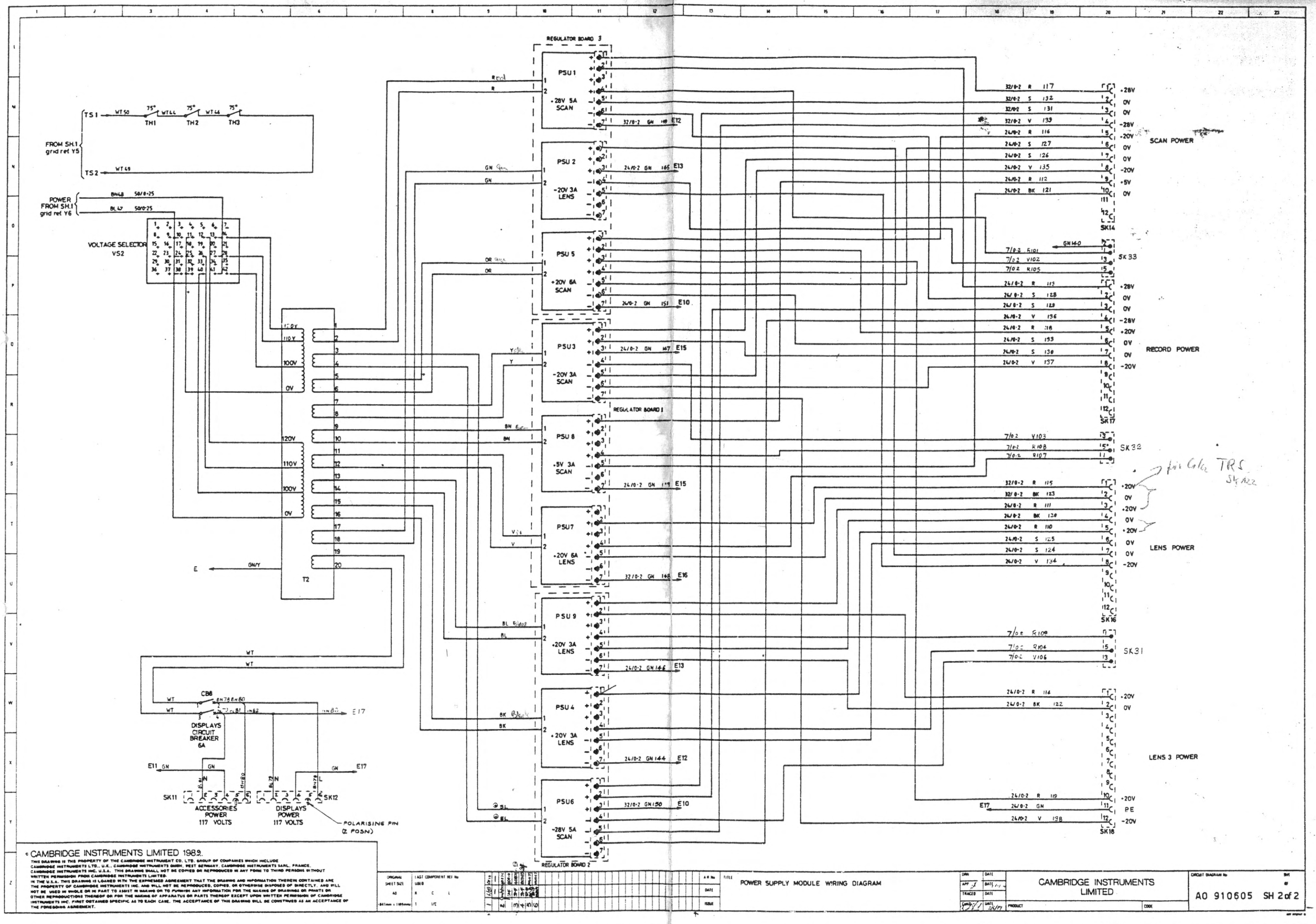

© CAMBRIDGE INSTRUMENTS LIMITED 1989.
THIS DRAWING IS THE PROPERTY OF THE CAMBRIDGE INSTRUMENT CO. LTD. GROUP OF COMPANIES WHICH INCLUDE CAMBRIDGE INSTRUMENTS LTD., U.K., CAMBRIDGE INSTRUMENTS GMBH, WEST GERMANY, CAMBRIDGE INSTRUMENTS SARL, FRANCE, CAMBRIDGE INSTRUMENTS INC. U.S.A. THIS DRAWING SHALL NOT BE COPIED OR REPRODUCED IN ANY FORM TO THIRD PERSONS WITHOUT WRITTEN PERMISSION FROM CAMBRIDGE INSTRUMENTS LIMITED.
IN THE U.S.A. THIS DRAWING IS LOANED WITH THE EXPRESSED AGREEMENT THAT THE DRAWING AND INFORMATION THEREIN CONTAINED ARE THE PROPERTY OF CAMBRIDGE INSTRUMENTS INC. AND WILL NOT BE REPRODUCED, COPIED, OR OTHERWISE DISPOSED OF DIRECTLY, AND WILL NOT BE USED IN WHOLE OR IN PART TO ASSIST IN MAKING OR TO FURNISH ANY INFORMATION FOR THE MAKING OF DRAWINGS OR PRINTS OR OTHER REPRODUCTIONS THEREOF OR FOR THE MAKING OF APPARATUS OR PARTS THEREOF EXCEPT UPON WRITTEN PERMISSION OF CAMBRIDGE INSTRUMENTS INC. FIRST OBTAINED SPECIFIC AS TO EACH CASE. THE ACCEPTANCE OF THIS DRAWING WILL BE CONSTRUED AS AN ACCEPTANCE OF THE FOREGOING AGREEMENT.

ORIGINAL SHEET SIZE A0	LAST COMPONENT REF No USED R C L	A.R. No	TITLE POWER SUPPLY MODULE WIRING DIAGRAM
		DATE	
		ISSUE	

CAMBRIDGE INSTRUMENTS LIMITED

CIRCUIT DIAGRAM No A0 910605 SH 2 of 2

8

PLANDALE S.M.A.

NOTE: A SUFFIX USED AT THE END OF A CABLE IDENT DENOTES WHAT LOCATION THE CABLE IS CONNECTED

SEE BLOCK DIAGRAM A0940486

eg: CABLE48 - OVERALL REFERENCE NUMBER TO DESCRIBE THE CABLE CONTAINED IN THE CABLE BIBLE.
SK104s - DESIGNATES THAT END OF THE CABLE TO THE EO CRATE AND PLUGS INTO THE C3 LENS PCB MODULE
NO SUFFIX ie PL818 IMPLIES THAT END OF THE CABLE CONNECTS TO A PANEL OR BACKPLANE

FOR SIGNAL DISTRIBUTION SEE DRWG A0-910292
FOR SINGLE CRATE INTERCONNECTIONS SEE DRWG A0-910294

PLOTTER

CONSOLE REAR PANEL 700-799

PART OF PANEL "D" 3K721

PANEL "J"

CABLE193 TO HARU CHASSIS

GUN

Braid

Top Gun Align Coils

Bottom Gun Align Coils

C1 Lens

C2 Lens

Stigmator Coils

Microshift Coils

Top Scan Coils

Bottom Scan Coils

C3 Lens

BEAM BLANK OPTION

CABLE90/91/92

CHAMBER

VENT VALVE

PENNING

2KV

PM

-1500V

SCINT

CABLE192

CABLE193

EO Crate 100-

VME BACKPLANE

EO BACKPLANE

CABLE44

CABLE175

SK153

SK163J

CATHODE OPTION

SK114 F

PL4S C3 Power

PL26 C1/C2 Power

PL22

PL23

PL24 Scan Power

PL25

PL27

CABLE206

SK 104S

SK 126

SK 122

SK 123

SK 124

SK 125

SK 127

SK580

PL580

CABLE EO PSU

CABLE 159

CATHODE

CABLE 160

-1500V

SK9010

PL10

EHT Assy 900-950

SK9018

SK900

CABLE93

CABLE101

CABLE97

Dust Filtration

CABLE18C

PSU

Image Processor Crate 200-

PL70

PL71

PL88

SK270

SK271

SK268

CABLE186

TO EO PSU EARTH BAR

CABLE51

CABLE48

CABLE45

CABLE44

CABLE87

OPTION SCN CONTROL J SCN ANALOGUE H

SK164J

CABLE151

PL18

EOPSU

CABLE22

CABLE175

VAC LOGIC

SK1A

SPEED CONTACTS

SK352 TURBO

FROM PL588

ROTARY

SK353 FAN

CABLE84

CABLE87

CABLE85

CABLE83

SK352 BAFFLE

EARTH BUS

CHASSIS

SK351

PL579

PL555

SK350

SK354 ION PUMP

TO TURBO CASE

CABLE145

STAR

CABLE205

CABLE143

EO PSU EARTH BAR

PL584

CABLE59

CABLE49

PL605A

PL605E

REG HT SUPPLY 8

SK2

SCINT BIAS

A PL13

OPTION MODULE 12KV

C D

12KV E

PL605

RECORD PSU CRATE F

PL605B

PL605F

SK605F

TO EO PSU EARTH BAR

CABLE147

CABLE106

CABLE50

CABLE107

SK709J

USER INTERFACE PCB 700-

PL9

PL804

PL816

PL814

PL801

PL802

CABLE89

SK19

SK4

SK16 C1/C2 LENS

SK14 SCAN

SK1 VAC CONTROL

SK2 RECORD PSU

SK3

PL803

SCN SUPPLY OPTION

CABLE151

SK510

PL810

SK18 C3 LENS

PL817

SKT17 HARU

CABLE21

SK6178

ION PUMP

CABLE83

CABLE82

CABLE91

PL536A

PL536B

PL536C

SK35 Drive A

SK36 Drive B

SK38 Drive C

STAGE CONTROL X,Y,Z DRIVERS ASSY 500-

PSU

CABLE191

CABLE88

CABLE142

C 12KV1a DYNAMIC FOCUS

PL17 Z AMPLIFIER

A SCAN AND CONTROL PL4

HARU PL ASSY 500-

TO CONSOLE CHASSIS

SK6106

CABLE193

SK6046

CABLE46

CABLE185

PL811

PL812

SK11 MONITORS 117V

SK12 117V

SK13 POWER CONTROL

EO POWER SUPPLY CRATE 800-

PE EARTH BAR

FANS

SK10 SK9 SK8 SK7 EHT SK6 SK5

TIMER RELAY 240VAC

TO EARTH BAR

PL5 PL1/1

L1 L2/N E

PL813

PART OF CABLE95

CABLE100

PL810

PL809

LINK PROCESSOR PL206

SYSTEM LINK POWER PL207

CABLE172

CABLE126

CABLE49

CABLE138

CABLE141

CABLE140

EHT CHASSIS

CONSOLE CHASSIS

RECORD UNIT CHASSIS

LINK TEMP PCB 500-

PL46

SK606-46

IMAGE PROCESSOR COOLING FANS

FAN

LCD displays & Control Panel

VACUUM

CRITTER

CHAMBER

POWER

OFF

750-

STANDBY

CONTROL PANEL PC232

SK7508

CABLE211

PART OF CABLE95

CABLE188 TO EO PSU EARTH BAR

FAN FAIL (700S)

SK7516

CABLE212

MAINS SUPPLY

REAR OF CONSOLE

SK388 FAN

CABLE53

CABLE52

LINK OPTIONS FANS (115V)

CABLE213

FOR OVERALL DETAIL OF CONTROL PANEL AND USER INTERFACE SEE DRWG A0-910294

© CAMBRIDGE INSTRUMENTS LIMITED 1986

THIS DRAWING IS THE PROPERTY OF THE CAMBRIDGE INSTRUMENTS CO. LTD. ... PROPERTY OF CAMBRIDGE INSTRUMENTS INC. ... IN THE U.S.A. THIS DRAWING SHALL NOT BE COPIED OR REPRODUCED IN ANY FORM OR TRANSMITTED WITHOUT WRITTEN PERMISSION FROM CAMBRIDGE INSTRUMENTS LIMITED.

WARNING : CAD PRODUCED CIRCUIT DO NOT HAND MODIFY

	186/18	186/88	H.H	H.H	8-88
	—	—	J.R	J.R	CHKD
LL	P.J	P.J	—	—	APP
P.F	P.F	P.F	P.F	P.F	PCA
27-1-88	29-9-87	9-8-87	25-1-87	12-11-86	DATE
24841	24145	23888	30788	INITIAL	MOD NO
5	4	3	2	1	ISSUE

TITLE

S360 OVERALL POWER SUPPLY WIRING DIAGRAM

	DATE
DRN H.H	2-8-88
CHKD J.R	12-11-86
APP —	
PCA P.F	12-11-86
PEB	

CAMBRIDGE INSTRUMENTS LIMITED

CIRCUIT DIAGRAM No. A0 - 910293

SHEET: 1 OF: 1

5

CIRCUIT DIAGRAM No.
A1 - 854606
SHEET 1 PAGE 1 OF 1

SK3: +20V_PS5, -20V_PS2, +28V_PS1
SK2: +20V_PS4, -28V_PS6, +20V_PS9, 0V
SK1: +5V_PS8, -20V_PS3, +20V_PS7

POS10VREG IC1 C1 — LT1021C-10 — Vi Vo GND TRIM — 0V, -20V_PS2
IC4 B1 — LM393a, LM393b — R13 10K, R17 8K2, R15 150R, R26 390K, R31 10K, R37 560R, R34 3K3, R12 2K2, R35 6K8, R25 470K, R14 10K, R5 3K9, R41 4K7, C6 0u10
D11 +12V BZY88C12, D4 1N916, D3 1N916, D12 1N916, LD2 HLMP-5050 — -20V

POS10VREG IC8 C5 — LT1021C-10 — 0V, -20V_PS3
IC11 B5 — LM393a, LM393b — R49 10K, R55 8K2, R52 150R, R62 390K, R66 10K, R73 560R, R70 3K3, R48 2K2, R71 6K8, R61 470K, R51 10K, R43 3K9, R77 4K7, C9 0u10
D27 +12V BZY88C12, D19 1N916, D18 1N916, D28 1N916, LD3 HLMP-5050 — -20V

+28V_PS1 — POS10VREG IC14 C4 — LT1021C-10 — 0V
IC17 B4 — LM393a, LM393b — R87 22K, R98 20K, R101 2K2, R104 3K3, R84 100R, R86 820R, R81 2K2, R109 6K8, R99 470K, R83 10K, R94 11K, C11 0u10, R108 1K2, R114 4K7
D42 +12V BZY88C12, D32 1N916, D31 1N916, D43 1N916, LD1 HLMP-5050 — 0V

POS10VREG IC2 C3 — LT1021C-10 — 0V, -28V_PS6
IC5 B3 — LM393a, LM393b — R9 10K, R10 5K1, R22 390K, R27 10K, R30 1K2, C5 0u10, R11 180R, R7 2K2, R28 3K3, R32 6K8, R23 470K, R16 11K, R8 3K9, R38 4K7
D8 +12V BZY88C12, D2 1N916, D1 1N916, D9 1N916, LD6 HLMP-5050 — -28V

+20V_PS5 — POS10VREG IC9 C2 — LT1021C-10 — 0V
IC12 B2 — LM393a, LM393b — R47 12K, R59 20K, R63 2K2, R72 1K2, C8 0u10, R45 100R, R44 2K2, R67 3K3, R68 6K8, R60 470K, R46 10K, R54 10K, R74 4K7
D24 +12V BZY88C12, D17 1N916, D16 1N916, D25 1N916, LD5 HLMP-5050 — +20V

+20V_PS9 — POS10VREG IC15 C6 — LT1021C-10 — 0V
IC18 B6 — LM393a, LM393b — R96 20K, R100 2K2, R110 1K2, C12 0u10, R86 12K, R82 100R, R80 2K2, R106 3K3, R107 6K8, R97 470K, R85 10K, R92 10K, R113 4K7
D40 +12V BZY88C12, D34 1N916, D33 1N916, D41 1N916, LD9 HLMP-5050 — +20

+5V_PS8 — C14 10u0 — C3 0u10, D46 1N5817, D47 1N5817, C2 0u10, R1 10K, R3 22K, C4 0u10, C1 1000p, R2 10K, R4 470R, R6 12K
IC6 C7 POS5VREG — LT1021C-5 — IC3 A7 — LM311N
+20V_PS4 — C7 0u10, R21 2K7, R20 1K8, 2K4, R19 11K, R24 11K, R33 180K, R36 10K, R29 180K, R39 10K, R117 2K2, R40 51R, R118 1K69, TR1 BC212B, R42 4K7
IC7 B7 — LM393a, LM393b — D10 1N916, D6 1N916, D13 1N916, D14 1N916, D15 1N916, LD8 HLMP-5050

POS10VREG IC10 C8 — LT1021C-10 — 0V

+20V_PS4 — R53 100R, R50 2K2, R56 10K, R58 10K, R57 12K, R64 20K, R69 2K2, R78 560R, C10 0u10, R75 3K3, R76 1K2, R65 470K, R79 4K7
IC13 B8 — LM393a, LM393b — D23 1N916, D22 1N916, D30 1N916, D29 +12V BZY88C12, LD4 HLMP-5050

+20V_PS7 — POS10VREG IC16 C9 — LT1021C-10 — 0V
IC19 B9 — LM393a, LM393b — R93 12K, R90 100R, R89 2K2, R91 10K, R95 10K, R103 20K, R105 3K2, R112 3K3, R111 6K8, R102 470K, R115 560R, C13 0u10, R116 4K7
D36 1N916, D37 1N916, D44 +12V BZY88C12, D45 1N916, LD7 HLMP-5050

© CAMBRIDGE INSTRUMENTS 1988

WARNING: METHEUS CAD DRAWING. DO NOT HAND MODIFY

DRN J. ROSE	DATE	5-1-88
CHKD		
APP		
PCA		
PCD	DATE	21-7-88
DRFTNG	ISSUE	1

TITLE: PSU SUPPLY LINE MONITOR

CAMBRIDGE INSTRUMENTS LIMITED

CIRCUIT DIAGRAM No. A1 - 854606
SHEET 1 PAGE 1 OF 1

A1-854590 SHT.1.

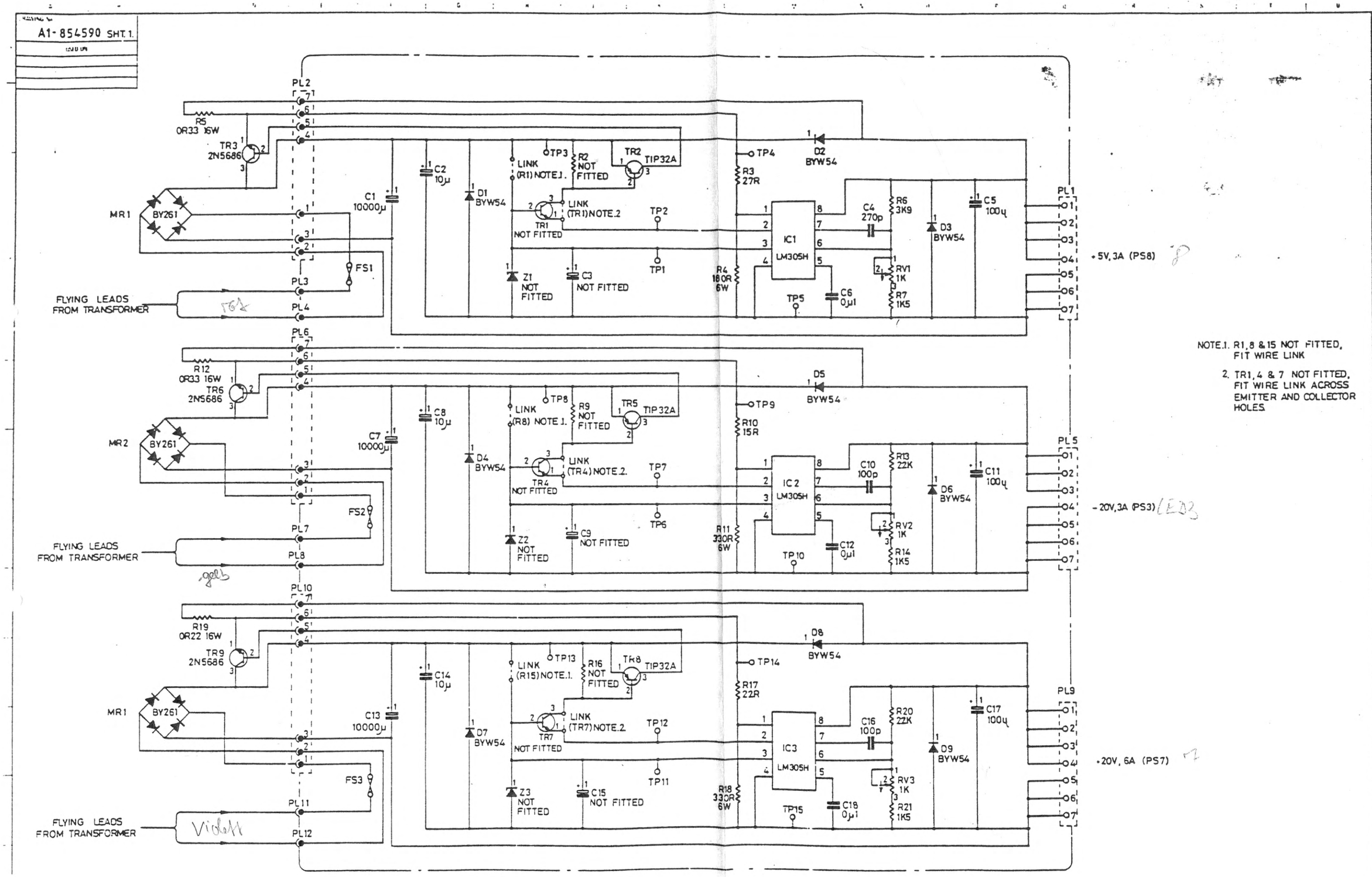

NOTE.1. R1, 8 & 15 NOT FITTED, FIT WIRE LINK

2. TR1, 4 & 7 NOT FITTED, FIT WIRE LINK ACROSS EMITTER AND COLLECTOR HOLES.

© CAMBRIDGE INSTRUMENTS LIMITED 1989.
THIS DRAWING IS THE PROPERTY OF THE CAMBRIDGE INSTRUMENT CO LTD GROUP OF COMPANIES WHICH INCLUDE CAMBRIDGE INSTRUMENTS LTD U.K., CAMBRIDGE INSTRUMENTS GMBH WEST GERMANY, CAMBRIDGE INSTRUMENTS SARL FRANCE, CAMBRIDGE INSTRUMENTS INC U.S.A. THIS DRAWING SHALL NOT BE COPIED OR REPRODUCED IN ANY FORM TO THIRD PERSONS WITHOUT WRITTEN PERMISSION FROM CAMBRIDGE INSTRUMENTS LIMITED.
IN THE U.S.A. THIS DRAWING IS LOANED WITH THE EXPRESSED AGREEMENT THAT THE DRAWING AND INFORMATION THEREIN CONTAINED ARE THE PROPERTY OF CAMBRIDGE INSTRUMENTS INC AND WILL NOT BE REPRODUCED, COPIED OR OTHERWISE DISPOSED OF DIRECTLY AND WILL NOT BE USED IN WHOLE OR IN PART TO ASSIST IN MAKING OR TO FURNISH ANY INFORMATION FOR THE MAKING OF DRAWINGS OR PRINTS OR OTHER REPRODUCTIONS THEREOF OR FOR THE MAKING OF APPARATUS OR PARTS THEREOF EXCEPT UPON WRITTEN PERMISSION OF CAMBRIDGE INSTRUMENTS INC FIRST OBTAINED SPECIFIC AS TO EACH CASE. THE ACCEPTANCE OF THIS DRAWING WILL BE CONSTRUED AS AN ACCEPTANCE OF THE FOREGOING AGREEMENT

LAST COMPONENT REF No USED
R21 C18 D9
IC3 VC3
Z3

UNLESS OTHERWISE STATED ALL RESISTORS ARE 1/2 WATT ±2% TOLERANCED

PSU REGULATOR 1

CAMBRIDGE INSTRUMENTS LIMITED

CIRCUIT DIAGRAM No A1-854590 Sheet 1

A1-854658 Sht.1

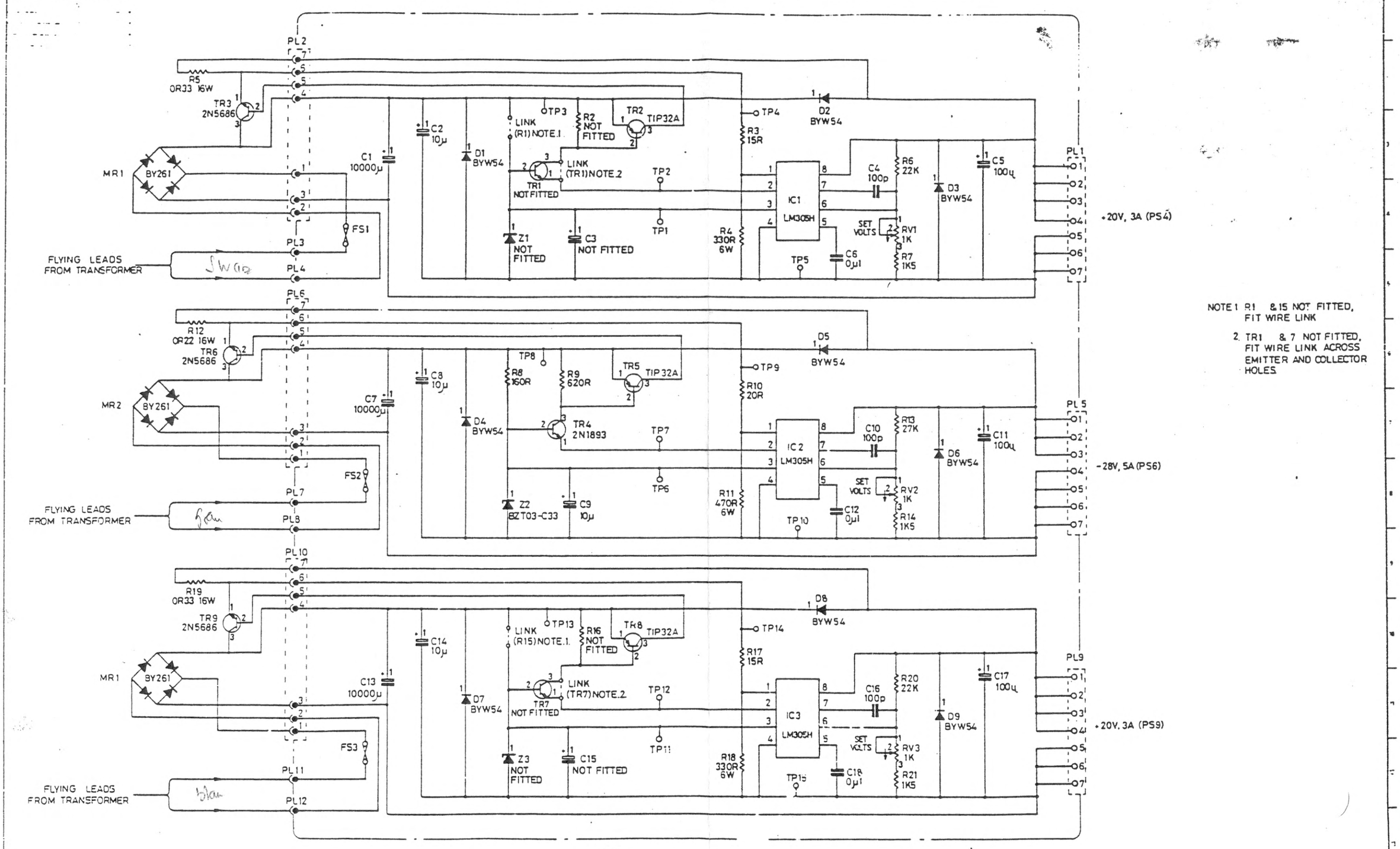

NOTE 1 R1 & 15 NOT FITTED, FIT WIRE LINK

2. TR1 & 7 NOT FITTED, FIT WIRE LINK ACROSS EMITTER AND COLLECTOR HOLES

© CAMBRIDGE INSTRUMENTS LIMITED 1989.

LAST COMPONENT REF No USED

R21 C18 D9 TR9 IC3 Z3

UNLESS OTHERWISE STATED ALL RESISTORS ARE 1/2 WATT 2% TOLERANCED

TITLE: PSU REGULATOR 2

CAMBRIDGE INSTRUMENTS LIMITED

CIRCUIT DIAGRAM No A1-854658 Sheet 1

11

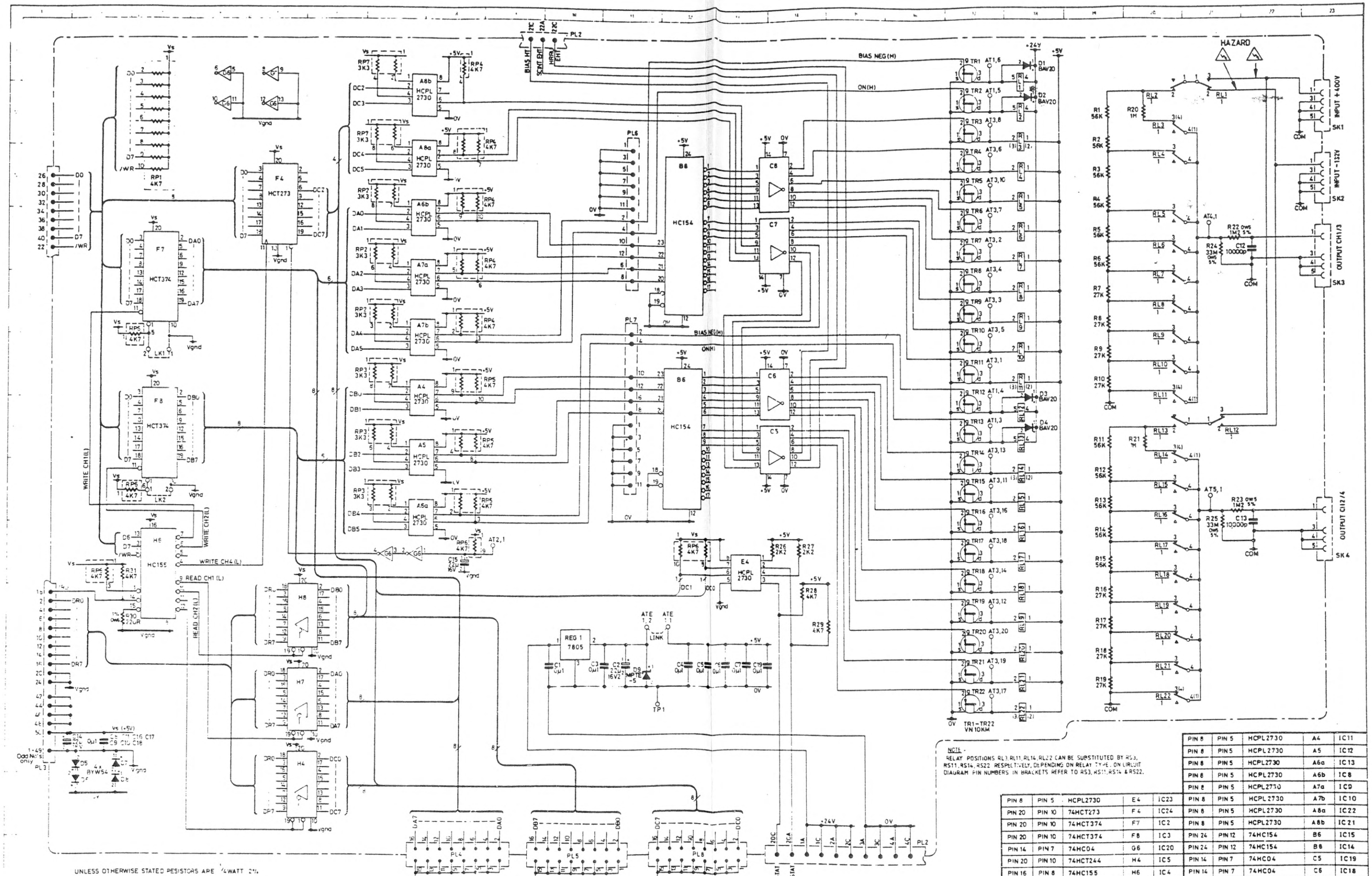

NOTE -
RELAY POSITIONS RL3, RL11, RL14, RL22 CAN BE SUBSTITUTED BY RS3, RS11, RS14, RS22 RESPECTIVELY, DEPENDING ON RELAY TYPE. ON CIRCUIT DIAGRAM PIN NUMBERS IN BRACKETS REFER TO RS3, RS11, RS14 & RS22.

Vs PIN No	Vgnd PIN No	IC TYPE	GRID REF	IC REF
PIN 8	PIN 5	HCPL2730	E4	IC23
PIN 20	PIN 10	74HCT273	F4	IC24
PIN 20	PIN 10	74HCT374	F7	IC2
PIN 20	PIN 10	74HCT374	F8	IC3
PIN 14	PIN 7	74HC04	G6	IC20
PIN 20	PIN 10	74HCT244	H4	IC5
PIN 16	PIN 8	74HC155	H6	IC4
PIN 20	PIN 10	74HCT244	H7	IC7
PIN 20	PIN 10	74HCT244	H8	IC6

+5V PIN No	0V PIN No	IC TYPE	GRID REF	IC REF
PIN 8	PIN 5	HCPL2730	A4	IC11
PIN 8	PIN 5	HCPL2730	A5	IC12
PIN 8	PIN 5	HCPL2730	A6a	IC13
PIN 8	PIN 5	HCPL2730	A6b	IC8
PIN 8	PIN 5	HCPL2730	A7a	IC9
PIN 8	PIN 5	HCPL2730	A7b	IC10
PIN 8	PIN 5	HCPL2730	A8a	IC22
PIN 8	PIN 5	HCPL2730	A8b	IC21
PIN 24	PIN 12	74HC154	B6	IC15
PIN 24	PIN 12	74HC154	B8	IC14
PIN 14	PIN 7	74HC04	C5	IC19
PIN 14	PIN 7	74HC04	C6	IC18
PIN 14	PIN 7	74HC04	C7	IC17
PIN 14	PIN 7	74HC04	C8	IC16

UNLESS OTHERWISE STATED RESISTORS ARE 1/4 WATT 2%

CAMBRIDGE INSTRUMENTS LIMITED 1986

SCINTILLATOR BIAS PCB CIRCUIT DIAGRAM

CAMBRIDGE INSTRUMENTS LIMITED

S360

A0-853450

SHEET 1

14

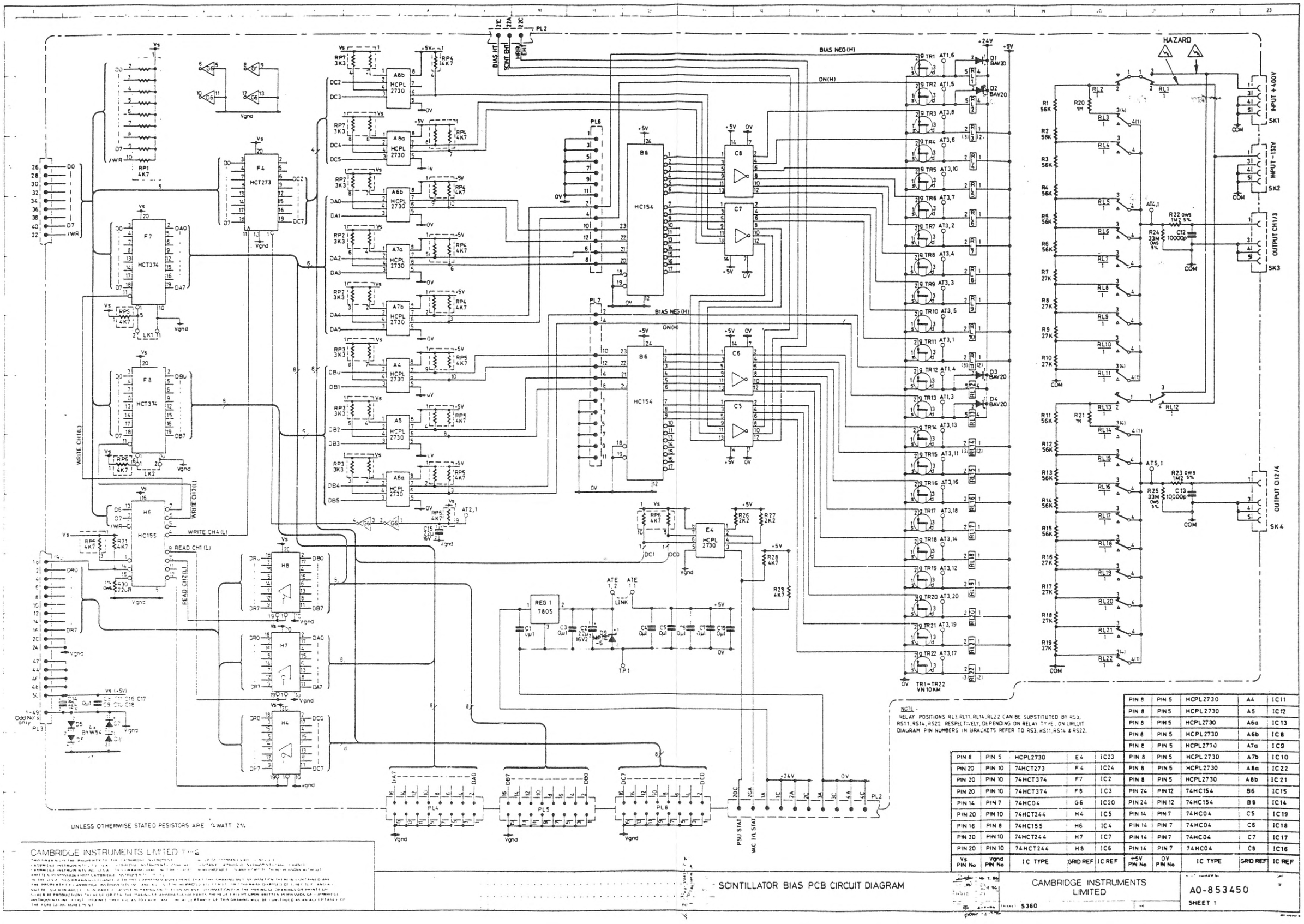

UNLESS OTHERWISE STATED RESISTORS ARE ¼WATT 2%

NOTE -
RELAY POSITIONS RL3,RL11,RL14,RL22 CAN BE SUBSTITUTED BY RS3, RS11,RS14,RS22 RESPECTIVELY, DEPENDING ON RELAY TYPE. ON CIRCUIT DIAGRAM PIN NUMBERS IN BRACKETS REFER TO RS3, RS11, RS14 & RS22.

PIN 8	PIN 5	HCPL2730	A4	IC11
PIN 8	PIN 5	HCPL2730	A5	IC12
PIN 8	PIN 5	HCPL2730	A6a	IC13
PIN 8	PIN 5	HCPL2730	A6b	IC8
PIN 8	PIN 5	HCPL2730	A7a	IC9
PIN 8	PIN 5	HCPL2730	A7b	IC10
PIN 8	PIN 5	HCPL2730	A8a	IC22
PIN 8	PIN 5	HCPL2730	A8b	IC21
PIN 24	PIN 12	74HC154	B6	IC15
PIN 24	PIN 12	74HC154	B8	IC14
PIN 14	PIN 7	74HC04	C5	IC19
PIN 14	PIN 7	74HC04	C6	IC18
PIN 14	PIN 7	74HC04	C7	IC17
PIN 14	PIN 7	74HC04	C8	IC16
PIN 8	PIN 5	HCPL2730	E4	IC23
PIN 20	PIN 10	74HCT273	F4	IC24
PIN 20	PIN 10	74HCT374	F7	IC2
PIN 20	PIN 10	74HCT374	F8	IC3
PIN 14	PIN 7	74HC04	G6	IC20
PIN 20	PIN 10	74HCT244	H4	IC5
PIN 16	PIN 8	74HC155	H6	IC4
PIN 20	PIN 10	74HCT244	H7	IC7
PIN 20	PIN 10	74HCT244	H8	IC6

Vs PIN No	Vgnd PIN No	IC TYPE	GRID REF	IC REF	+5V PIN No	0V PIN No	IC TYPE	GRID REF	IC REF

CAMBRIDGE INSTRUMENTS LIMITED 1986

SCINTILLATOR BIAS PCB CIRCUIT DIAGRAM

CAMBRIDGE INSTRUMENTS LIMITED

S360

A0-853450

SHEET 1

15

DRAWING No
A1 853604

USED ON
714212

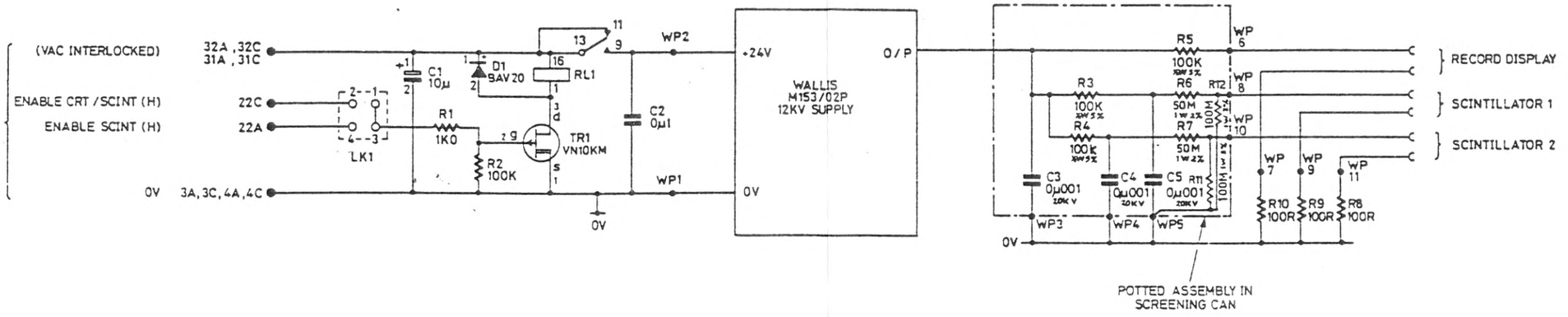

WP1 = Wiring Pin 1 (typical)

© CAMBRIDGE INSTRUMENTS LIMITED 198.6.
THIS DRAWING IS THE PROPERTY OF THE CAMBRIDGE INSTRUMENT CO. LTD. GROUP OF COMPANIES WHICH INCLUDE CAMBRIDGE INSTRUMENTS LTD., U.K. CAMBRIDGE INSTRUMENTS GMBH, WEST GERMANY, CAMBRIDGE INSTRUMENTS SARL, FRANCE, CAMBRIDGE INSTRUMENTS INC., U.S.A. THIS DRAWING SHALL NOT BE COPIED OR REPRODUCED IN ANY FORM TO THIRD PERSONS WITHOUT WRITTEN PERMISSION FROM CAMBRIDGE INSTRUMENTS LIMITED.
IN THE U.S.A. THIS DRAWING IS LOANED WITH THE EXPRESSED AGREEMENT THAT THE DRAWING AND INFORMATION THEREIN CONTAINED ARE THE PROPERTY OF CAMBRIDGE INSTRUMENTS INC. AND WILL NOT BE REPRODUCED, COPIED, OR OTHERWISE DISPOSED OF DIRECTLY AND WILL NOT BE USED IN WHOLE OR IN PART TO ASSIST IN MAKING OR TO FURNISH ANY INFORMATION FOR THE MAKING OF DRAWINGS OR PRINTS OR OTHER REPRODUCTIONS THEREOF OR FOR THE MAKING OF APPARATUS OR PARTS THEREOF EXCEPT UPON WRITTEN PERMISSION OF CAMBRIDGE INSTRUMENTS INC. FIRST OBTAINED SPECIFIC AS TO EACH CASE. THE ACCEPTANCE OF THIS DRAWING WILL BE CONSTRUED AS AN ACCEPTANCE OF THE FOREGOING AGREEMENT.

LAST COMPONENT REF No
USED
R12 .5 LK1
R1 .5

		P.C.A
		P.E.D
		ENG
	INIT	C/N
		DATE

UNLESS OTHERWISE STATED ALL RESISTORS ARE 0.6 w WATT 1% TOLERANCED

TITLE
12KV SUPPLY MODULE

CIRCUIT DIAGRAM

DRN	DATE 19-2-86	CAMBRIDGE INSTRUMENTS LIMITED
APP	DATE	
TRACED	DATE	
CHKD	DATE	PRODUCT 5360

CIRCUIT DIAGRAM No
A1 853604
Sht 1

SHT
OF

16

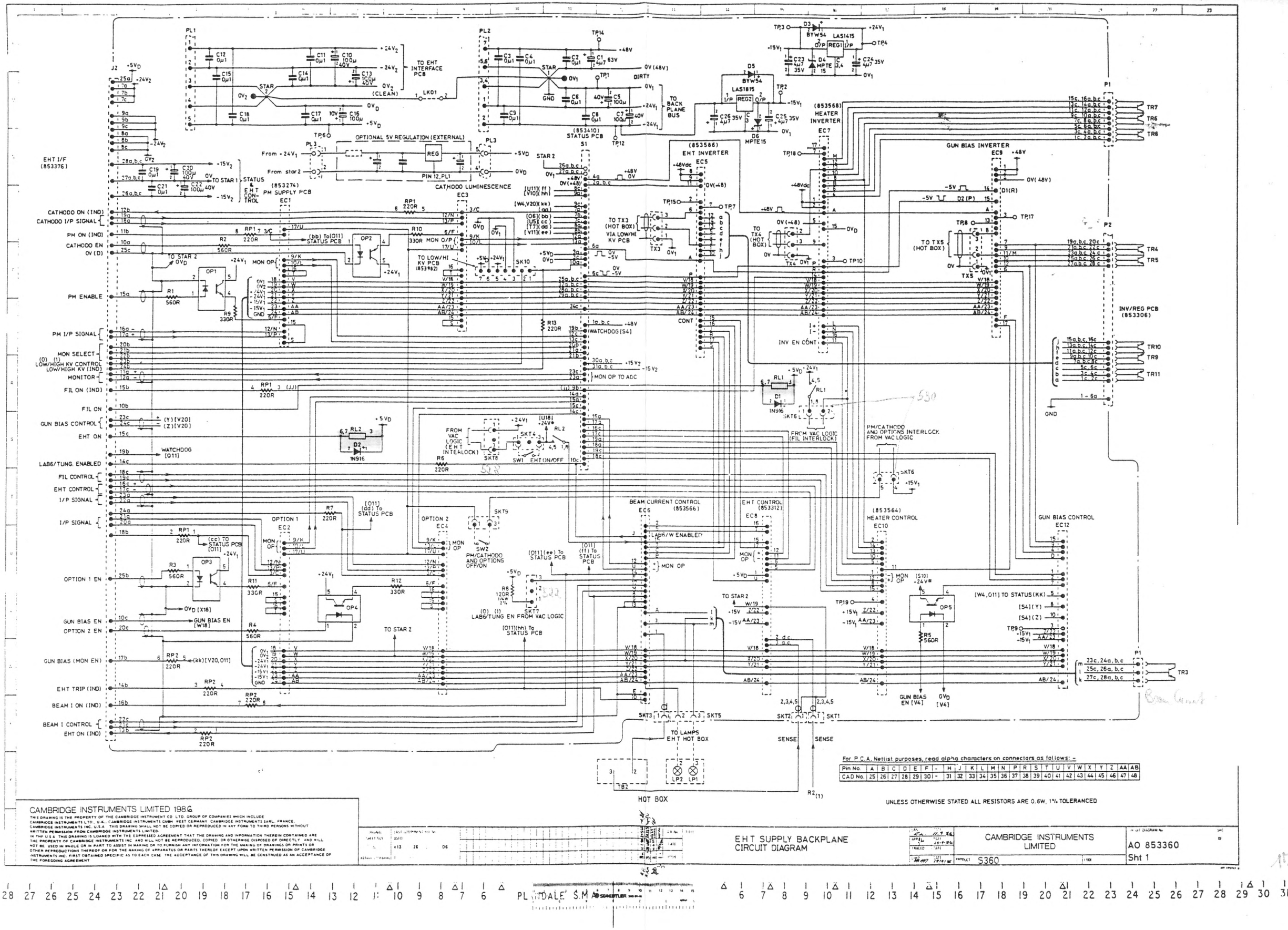

For P.C.A. Nettist purposes, read alpha characters on connectors as follows: -

Pin No.	A	B	C	D	E	F	-	H	J	K	L	M	N	P	R	S	T	U	V	W	X	Y	Z	AA	AB
CAD No.	25	26	27	28	29	30	-	31	32	33	34	35	36	37	38	39	40	41	42	43	44	45	46	47	48

UNLESS OTHERWISE STATED ALL RESISTORS ARE 0.6W, 1% TOLERANCED

CAMBRIDGE INSTRUMENTS LIMITED 1986
THIS DRAWING IS THE PROPERTY OF THE CAMBRIDGE INSTRUMENT CO. LTD. GROUP OF COMPANIES WHICH INCLUDE CAMBRIDGE INSTRUMENTS LTD., U.K.; CAMBRIDGE INSTRUMENTS GMBH, WEST GERMANY; CAMBRIDGE INSTRUMENTS SARL, FRANCE; CAMBRIDGE INSTRUMENTS INC, U.S.A. THIS DRAWING SHALL NOT BE COPIED OR REPRODUCED IN ANY FORM TO THIRD PERSONS WITHOUT WRITTEN PERMISSION FROM CAMBRIDGE INSTRUMENTS LIMITED.
IN THE U.S.A. THIS DRAWING IS LOANED WITH THE EXPRESSED AGREEMENT THAT THE DRAWING AND INFORMATION THEREIN CONTAINED ARE THE PROPERTY OF CAMBRIDGE INSTRUMENTS INC. AND WILL NOT BE REPRODUCED, COPIED OR OTHERWISE DISPOSED OF DIRECTLY, AND WILL NOT BE USED IN WHOLE OR IN PART TO ASSIST IN MAKING OR TO FURNISH ANY INFORMATION FOR THE MAKING OF DRAWINGS OR PRINTS OR OTHER REPRODUCTIONS THEREOF OR FOR THE MAKING OF APPARATUS OR PARTS THEREOF EXCEPT UPON WRITTEN PERMISSION OF CAMBRIDGE INSTRUMENTS INC. FIRST OBTAINED SPECIFIC AS TO EACH CASE. THE ACCEPTANCE OF THIS DRAWING WILL BE CONSTRUED AS AN ACCEPTANCE OF THE FOREGOING AGREEMENT.

EHT SUPPLY BACKPLANE CIRCUIT DIAGRAM

CAMBRIDGE INSTRUMENTS LIMITED

PRODUCT S360

AO 853360 Sht 1

DRAWING NO. A1-853360

USED ON 713876

PROJECTION

DO NOT SCALE

PCB	ENG	PCA			DATE	ISSUE
			INITIAL		28.6.86	3
MC	AT	AT	22778 24706		18.1.87	3A
AT	AT	AT	23569 25892		10.4.87	4
MC	KAM	SH	24263	SHH	29.10.87	4A

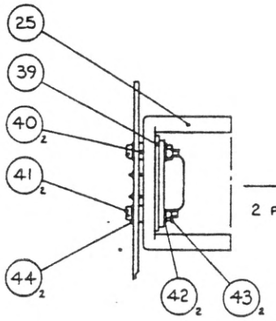

ITEMS SHOWN DOTTED TO BE FITTED ON 'A' SIDE OF BOARD

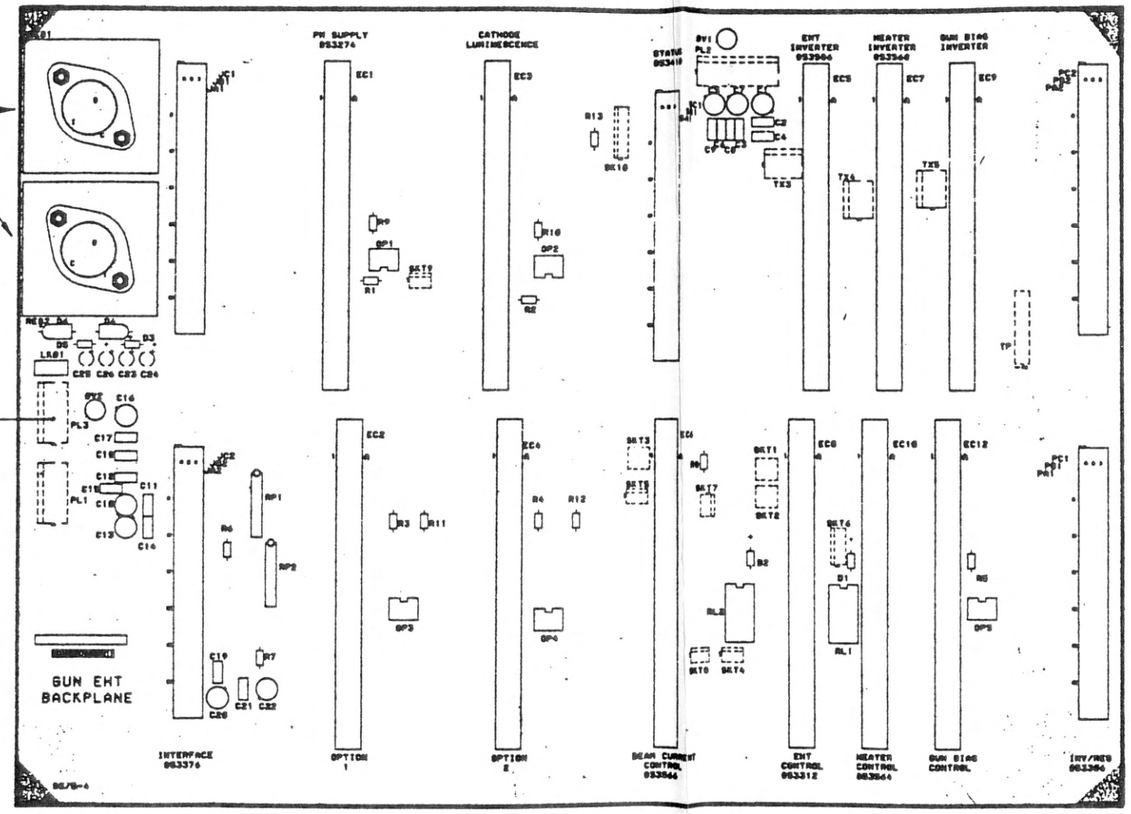

NOTE:
COMPONENTS LISTED BELOW TO BE OMMITTED UNTIL AFTER ATE
D1, D2, D3, D4, D5, D6
RL1, RL2
RP1, RP2
C1 - C26
OP1, OP2, OP3, OP4, OP5
R1 - R13
REG1, REG2.

0 INCHES 1
0 10 20 30 mm

© CAMBRIDGE INSTRUMENTS LTD. 1986

DRN. DATE 28-6-86	CONFIDENTIAL	MATERIAL: SEE PARTS LIST	TOLERANCES (UNLESS OTHERWISE STATED) DECIMAL ± FRACTIONS & WHOLE NUMBERS ± ANGULAR ±	CAMBRIDGE INSTRUMENTS LTD.
DESIGN ENG. DATE 18-9-86	This document is the property of Cambridge Instruments Ltd. Its contents must not be copied or communicated to a third party without the written permission of the Company.	PROTECTIVE FINISH	DIMENSIONS IN UNLESS OTHERWISE STATED	TITLE S360 EHT BACKPLANE ASSEMBLY
APPROVED DATE 25-9-86 PROD. REL. 19-9-86			SURFACE ROUGHNESS UNLESS OTHERWISE STATED	SCALE: 1:1 DRAWING No. A1-853360 SHT 4

THIS DRG. CONFORMS TO BS. 308: 1972

REMOVE BURRS FROM SHARP EDGES AND CORNERS USING RAG WAX

18

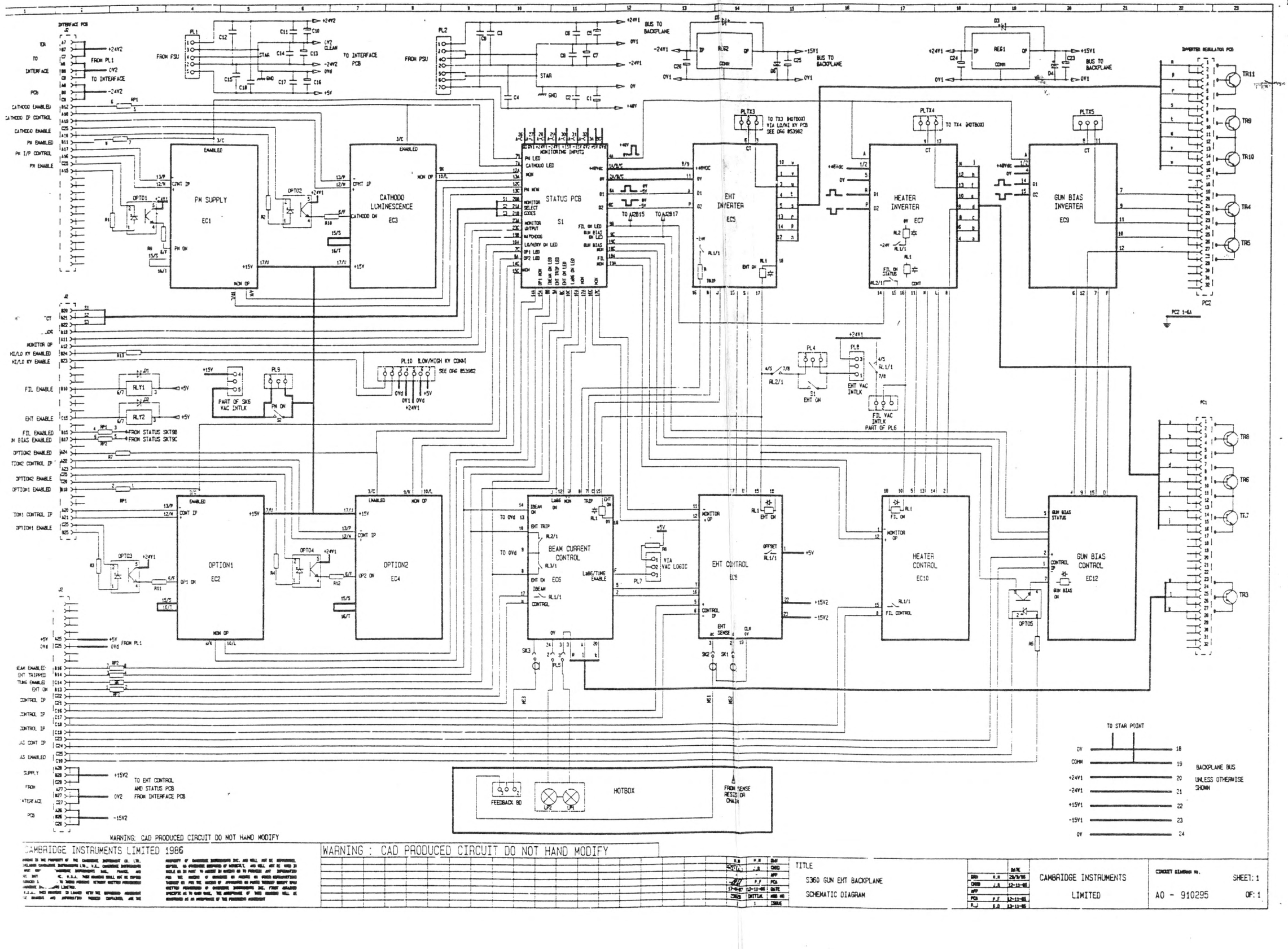

CAMBRIDGE INSTRUMENTS LIMITED 1986

WARNING : CAD PRODUCED CIRCUIT DO NOT HAND MODIFY

TITLE

9360 GUN EHT BACKPLANE

SCHEMATIC DIAGRAM

		DATE
DRN	R.H	29/3/85
CHKD	J.B	12-11-86
APP		
PCN	P.F	12-11-86
ECN	S.D	13-11-86

CAMBRIDGE INSTRUMENTS LIMITED

CIRCUIT DIAGRAM No. AO - 910295

SHEET: 1 OF: 1

DRAWING No (2 of 2)
A1 853376 SHT 1

USED ON

Grid Ref	I.C. no.	Description	Grid Ref	I.C. no.	Description	Grid Ref	I.C. no.	Description	Grid Ref	I.C. no.	Description
A1	79	74LS245N 0V-10, +5V-20 ✳	E1	68	74ALS573 0V-10, +5V-20	H1	38	MB8128-10M 0V-12, +5V-24	K1	1	74LS244 0V-10, +5V-20 ✳
–	–	———	E2	66	74ALS573 0V-10, +5V-20	H2	35	74LS245N 0V-10, +5V-20	K2a	2	OPTO 2631 as diagram ✳
B2	78	74LS245N 0V-10, +5V-20	E3	44	74HCT244 0V-10, +5V-20	H3	40	EPROM 853658 0V-12, +5V-24	K2b	16	OPTO 2631 as diagram
B3a	70	LT1013 as diagram	E4	37	74HCT244 0V-10, +5V-20	H4	34	74LS245N 0V-10, +5V-24 ✳	K3a	4	OPTO 2631 as diagram ✳
B3b	72	AD625 as diagram	E5	36	74HCT244 0V-10, +5V-20	–	–	———	K3b	14	OPTO 2631 as diagram
B4	73	SW202 as diagram	E6	65	DAC1230KN as diagram ✳	H5b	76	74LS244 0V-10, +5V-20	K4a	6	OPTO 2631 as diagram ✳
–	–	———	E7	60	LF353 as diagram ✳	H6	30	74HCT244 0V-10, +5V-20	K4b	12	OPTO 2631 as diagram
B6	53	DAC7534JN as diagram	E8	67	DAC1230KN as diagram ✳	H8	29	74HCT244 0V-10, +5V-20	K5a	8	OPTO 2631 as diagram ✳
B7	54	LF353 as diagram	–	–	———	–	–	———	K5b	10	OPTO 2631 as diagram
B8	55	DAC1230KN as diagram	F2	46	74HCT244 0V-10, +5V-20 ✳	J1	18	74LS244 0V-10, +5V-20	K6a	28	OPTO 2631 as diagram
–	–	———	F3	45	74HCT244 0V-10, +5V-20	J2a	3	OPTO 2631 as diagram ✳	K6b	26	OPTO 2631 as diagram
–	–	———	F4	47	74LS273N 0V-10, +5V-20	J2b	17	OPTO 2631 as diagram	K7	24	OPTO 2631 as diagram
C4	62	LT1013C as diagram	F5	48	74LS273N 0V-10, +5V-20	J3a	5	OPTO 2631 as diagram ✳	K8a	22	OPTO 2631 as diagram
C6	57	DAC1230KN as diagram	F6	32	74HC123 0V-8, +5V-16	J3b	15	OPTO 2631 as diagram	K8b	19	OPTO 2631 as diagram
C7	56	LF353 as diagram	F8	71	1021 DCN8	J4a	7	OPTO 2631 as diagram ✳	–	–	———
C8	59	DAC1230KN as diagram ✳	–	–	———	J4b	13	OPTO 2631 as diagram	L6	77	74LS244 0V-10, +5V-20
–	–	———	–	–	———	J5a	9	OPTO 2631 as diagram ✳	–	–	———
–	–	———	G1	39	MB8128-10M 0V-12, +5V-24 ✳	J5b	11	OPTO 2631 as diagram	–	–	———
D2	50	ADC-7550 as diagram	G2	41	PAL 853657 0V-10, +5V-20	J6a	27	OPTO 2631 as diagram	–	–	———
D4	69	DAC 1230KN as diagram	G3	74	74HC240 0V-10, +5V-20	J6b	25	OPTO 2631 as diagram	–	–	———
D6	61	DAC 1230KN as diagram	G4	43	74HC13 0V-8, +5V-16	J7	23	OPTO 2631 as diagram	–	–	———
D7	58	LF353 as diagram	G5	64	74HC32 0V-7, +5V-14	J8a	21	OPTO 2631 as diagram	–	–	———
D8	63	DAC1230KN as diagram ✳	G6	31	74HC08 0V-7, +5V-14	J8b	20	OPTO 2631 as diagram	–	–	———
–	–	———	G7	42	74HC138 0V-8, +5V-16	–	–	———	–	–	———
–	–	———	G8	75	74HCT244 0V-10, +5V-20	–	–	———	–	–	———
–	–	———	–	–	———	–	–	———	–	–	———

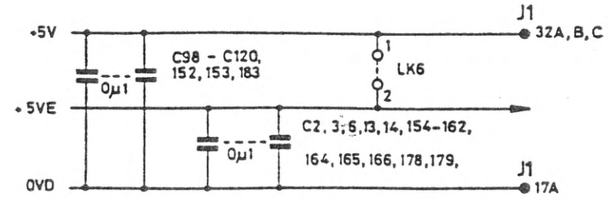

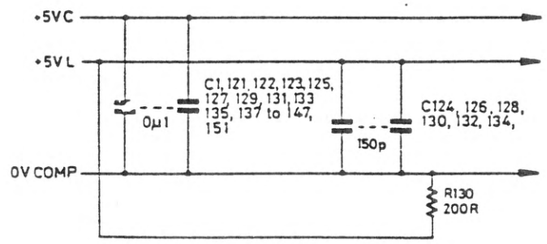

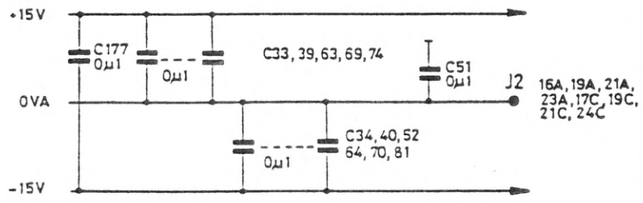

✳ :- COMPONENTS MARKED THUS ARE NOT FITTED ON THIS ASSEMBLY

© CAMBRIDGE INSTRUMENTS LIMITED 1986.
THIS DRAWING IS THE PROPERTY OF THE CAMBRIDGE INSTRUMENT CO. LTD. GROUP OF COMPANIES WHICH INCLUDE CAMBRIDGE INSTRUMENTS LTD., U.K., CAMBRIDGE INSTRUMENTS GMBH, WEST GERMANY, CAMBRIDGE INSTRUMENTS S.A.R.L., FRANCE, CAMBRIDGE INSTRUMENTS INC., U.S.A. THIS DRAWING SHALL NOT BE COPIED OR REPRODUCED IN ANY FORM TO THIRD PERSONS WITHOUT WRITTEN PERMISSION FROM CAMBRIDGE INSTRUMENTS LIMITED.
IN THE U.S.A. THIS DRAWING IS LOANED WITH THE EXPRESSED AGREEMENT THAT THE DRAWING AND INFORMATION THEREIN CONTAINED ARE THE PROPERTY OF CAMBRIDGE INSTRUMENTS INC. AND WILL NOT BE REPRODUCED, COPIED, OR OTHERWISE DISPOSED OF DIRECTLY AND WILL NOT BE USED IN WHOLE OR IN PART TO ASSIST IN MAKING OR TO FURNISH ANY INFORMATION FOR THE MAKING OF DRAWINGS OR PRINTS OR OTHER REPRODUCTIONS THEREOF OR FOR THE MAKING OF APPARATUS OR PARTS THEREOF EXCEPT UPON WRITTEN PERMISSION OF CAMBRIDGE INSTRUMENTS INC. FIRST OBTAINED SPECIFIC AS TO EACH CASE. THE ACCEPTANCE OF THIS DRAWING WILL BE CONSTRUED AS AN ACCEPTANCE OF THE FOREGOING AGREEMENT.

LAST COMPONENT REF No USED
R C L
T D/C

| | | |

Read back to CPU
from Status (EHT) Board (Alternate)

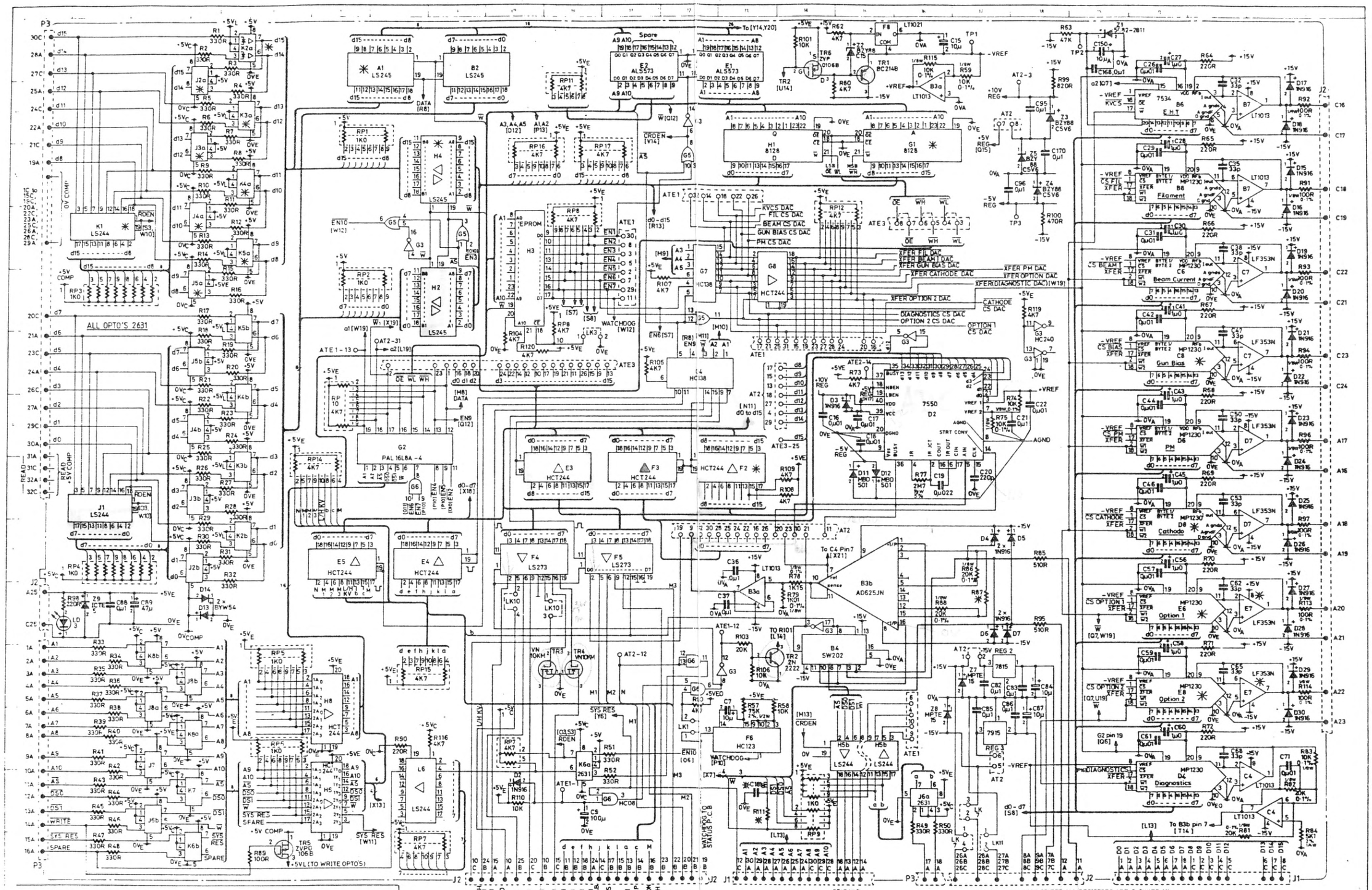

CAMBRIDGE INSTRUMENTS LIMITED 1986

UNLESS OTHERWISE STATED ALL RESISTORS ARE 0.6WATT 1%

✳ - COMPONENTS MARKED THUS ARE NOT FITTED ON THIS ASSEMBLY.
R111 IS REPLACED BY A WIRE LINK.

S360 E.H.T. INTERFACE P.C.B.
- CIRCUIT DIAGRAM

CAMBRIDGE INSTRUMENTS LIMITED

PROJECT S360

A0 853376
Sht 1

20b

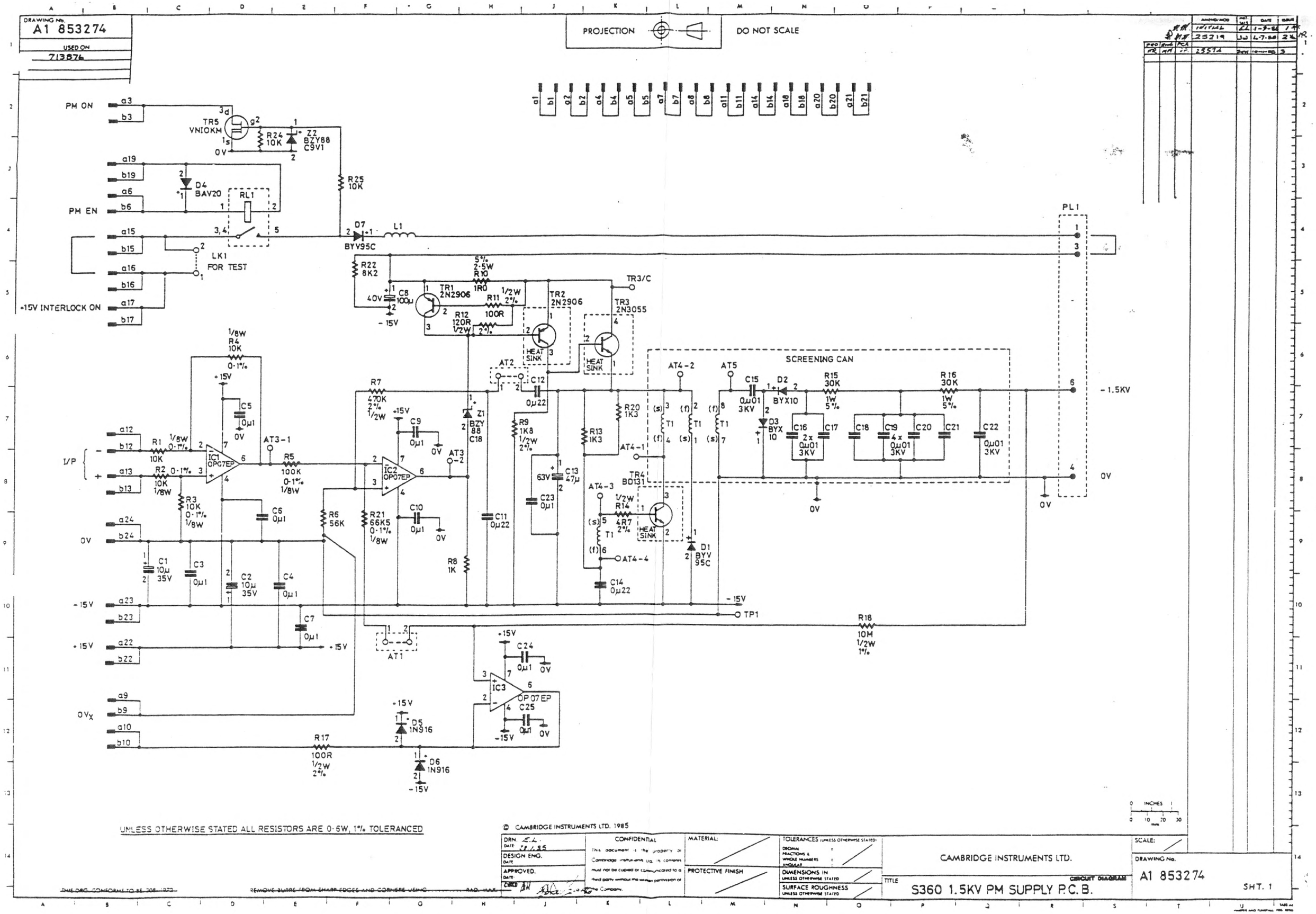
DRAWING No.
A1 853274
USED ON
713876
PROJECTION
DO NOT SCALE
PM ON
PM EN
+15V INTERLOCK ON
TR5 VN10KM
R24 10K
Z2 BZY88 C9V1
D4 BAV20
RL1
R25 10K
D7 BYV95C
L1
LK1 FOR TEST
R22 8K2
C8 100µ
TR1 2N2906
R10 1R0
R11 100R
R12 120R
TR2 2N2906
TR3 2N3055
TR3/C
HEAT SINK
PL1
SCREENING CAN
AT2
AT4-2
AT5
C15 0µ01 3KV
D2 BYX10
R15 30K 1W 5%
R16 30K 1W 5%
D3 BYX 10
C16 2x 0µ01 3KV
C17
C18
C19 4x 0µ01 3KV
C20
C21
C22 0µ01 3KV
-1.5KV
0V
I/P
R1 10K
R2 10K
R3 10K
R4 10K
C5 0µ1
IC1 OP07EP
AT3-1
R5 100K
C6 0µ1
R6 56K
R7 470K
C9 0µ1
IC2 OP07EP
AT3-2
R21 66K5
C10 0µ1
Z1 BZY 88 C18
C11 0µ22
R8 1K
C12 0µ22
R9 1K8
C13 47µ
C23 0µ1
R13 1K3
R20 1K3
AT4-1
TR4 BD131
AT4-3
R14 4R7
AT4-4
C14 0µ22
D1 BYV 95C
C1 10µ 35V
C3 0µ1
C2 10µ 35V
C4 0µ1
C7 0µ1
-15V
TP1
R18 10M 1/2W 1%
AT1
C24 0µ1
IC3 OP07EP
C25 0µ1
D5 1N916
D6 1N916
R17 100R 1/2W 2%
0Vx
UNLESS OTHERWISE STATED ALL RESISTORS ARE 0·6W, 1% TOLERANCED
© CAMBRIDGE INSTRUMENTS LTD. 1985
CONFIDENTIAL
MATERIAL:
PROTECTIVE FINISH
TOLERANCES
DIMENSIONS IN
SURFACE ROUGHNESS
CAMBRIDGE INSTRUMENTS LTD.
TITLE
CIRCUIT DIAGRAM
S360 1.5KV PM SUPPLY P.C.B.
SCALE:
DRAWING No.
A1 853274
SHT. 1
INCHES
mm

DRAWING No. A1 853564 SHT 1

USED ON 713876

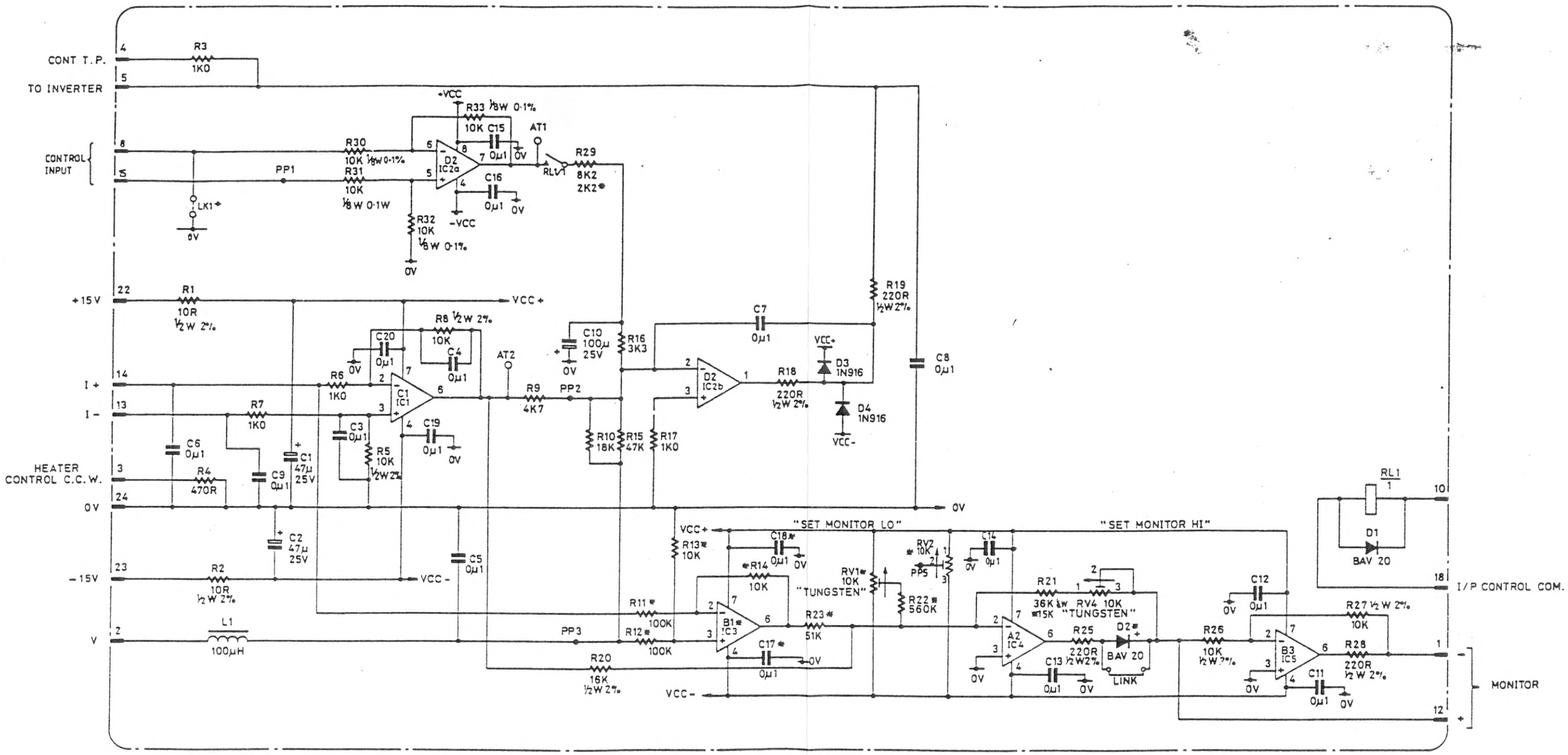

* THESE COMPONENTS ARE NOT FITTED ON THIS ASSY SHOWN FOR REF. ONLY (FOR CONVERSION TO S250)

PP1 = Probe Point 1 (typical)

A2	IC4	OP07EP VCC+ - 7, VCC- - 4	B3	IC5	TL081 VCC+ - 7, VCC- - 4	D2	IC2a IC2b	LF353 VCC+ - 8, VCC- - 4
B1 *	IC3	TL081 VCC+ - 7, VCC- - 4	C1	IC1	OP07EP VCC+ - 7, VCC- - 4			

© CAMBRIDGE INSTRUMENTS LIMITED 1985.
THIS DRAWING IS THE PROPERTY OF THE CAMBRIDGE INSTRUMENT CO. LTD. GROUP OF COMPANIES WHICH INCLUDE CAMBRIDGE INSTRUMENTS LTD., U.K., CAMBRIDGE INSTRUMENTS GMBH, WEST GERMANY, CAMBRIDGE INSTRUMENTS SARL, FRANCE, CAMBRIDGE INSTRUMENTS INC. U.S.A. THIS DRAWING SHALL NOT BE COPIED OR REPRODUCED IN ANY FORM TO THIRD PERSONS WITHOUT WRITTEN PERMISSION FROM CAMBRIDGE INSTRUMENTS LIMITED.
THE U.S.A. THIS DRAWING IS LOANED WITH THE EXPRESSED AGREEMENT THAT THE DRAWING AND INFORMATION THEREIN CONTAINED ARE PROPERTY OF CAMBRIDGE INSTRUMENTS INC. AND WILL NOT BE REPRODUCED, COPIED, OR OTHERWISE DISPOSED OF DIRECTLY, AND WILL BE USED IN WHOLE OR IN PART TO ASSIST IN MAKING OR TO FURNISH ANY INFORMATION FOR THE MAKING OF DRAWINGS OR PRINTS OR OTHER REPRODUCTIONS THEREOF OR FOR THE MAKING OF APPARATUS OR PARTS THEREOF EXCEPT UPON WRITTEN PERMISSION OF CAMBRIDGE INSTRUMENTS INC. FIRST OBTAINED SPECIFIC AS TO EACH CASE. THE ACCEPTANCE OF THIS DRAWING WILL BE CONSTRUED AS AN ACCEPTANCE OF THE FOREGOING AGREEMENT.

LAST COMPONENT REF No USED
R 35 C 20 L1
X 24 I/C 5

C/N No	DATE	ISSUE
24506	24 5 86	3
24 50	9 6 86	2
INITIAL		1

UNLESS OTHERWISE STATED ALL RESISTORS ARE 0·6 WATT 1% TOLERANCED

TITLE: HEATER CONTROL P.C.B. CIRCUIT DIAGRAM

DRN E.L. DATE 15.11.86
APP CWF DATE 10/7/86
TRACED DATE
CHKD DATE 22-7-86

CAMBRIDGE INSTRUMENTS LIMITED

PRODUCT 5360 CODE

CIRCUIT DIAGRAM No. A1 853564 SHT 1

SHT OF

22

A1 853568

USED ON

713876

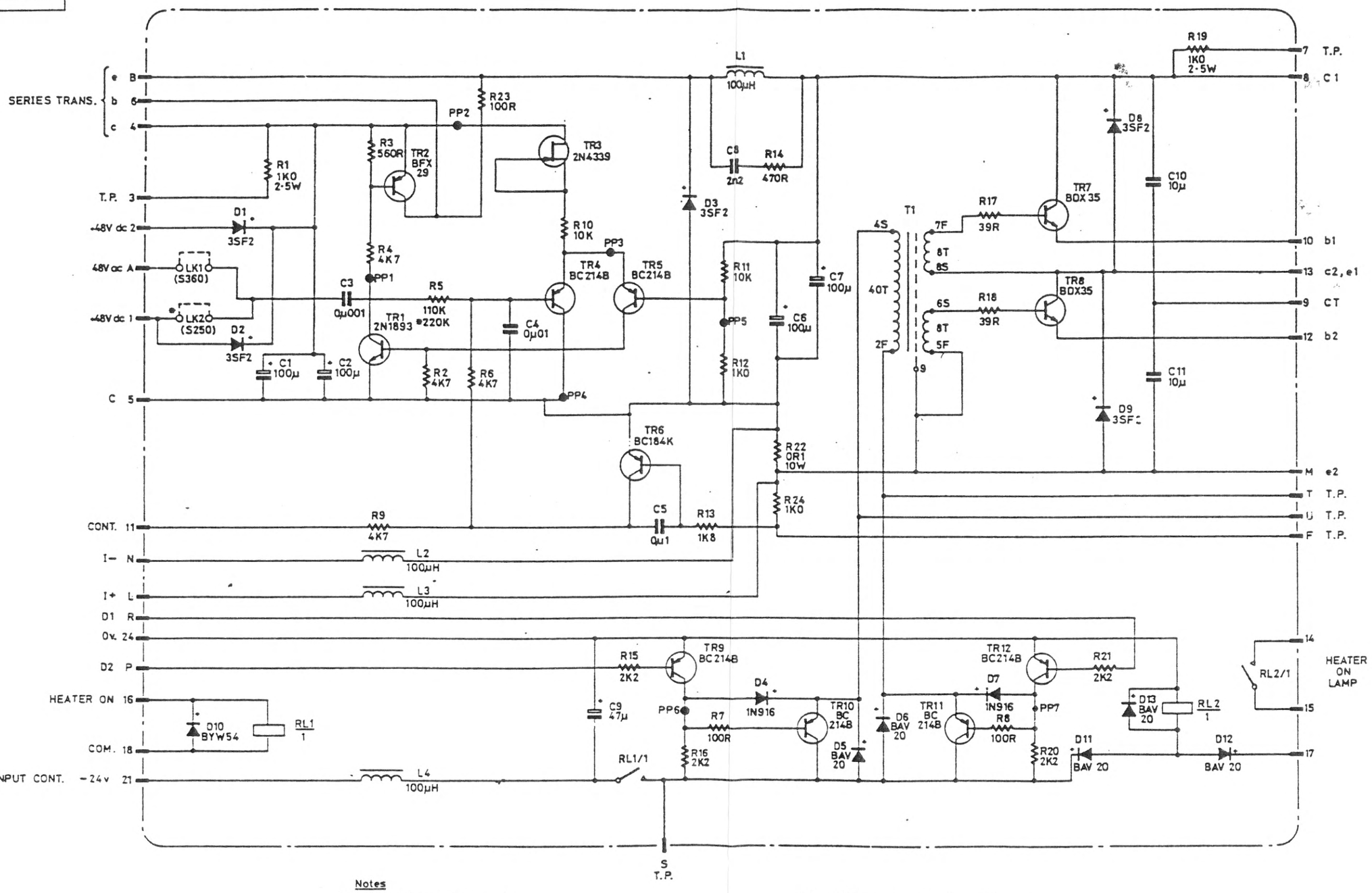

Notes

1. PP1 = Probe point 1 (typical).

● For S250: Replace R5 with a 220K resistor. Remove LK1. Replace with LK2.

© CAMBRIDGE INSTRUMENTS LIMITED 1985.

THIS DRAWING IS THE PROPERTY OF THE CAMBRIDGE INSTRUMENT CO. LTD. GROUP OF COMPANIES WHICH INCLUDE CAMBRIDGE INSTRUMENTS LTD., U.K., CAMBRIDGE INSTRUMENTS GMBH, WEST GERMANY, CAMBRIDGE INSTRUMENTS SARL, FRANCE, CAMBRIDGE INSTRUMENTS INC. U.S.A. THIS DRAWING SHALL NOT BE COPIED OR REPRODUCED IN ANY FORM TO THIRD PERSONS WITHOUT WRITTEN PERMISSION FROM CAMBRIDGE INSTRUMENTS LIMITED.

IN THE U.S.A. THIS DRAWING IS LOANED WITH THE EXPRESSED AGREEMENT THAT THE DRAWING AND INFORMATION THEREIN CONTAINED ARE THE PROPERTY OF CAMBRIDGE INSTRUMENTS INC. AND WILL NOT BE REPRODUCED, COPIED, OR OTHERWISE DISPOSED OF DIRECTLY, AND WILL NOT BE USED IN WHOLE OR IN PART TO ASSIST IN MAKING OR TO FURNISH ANY INFORMATION FOR THE MAKING OF DRAWINGS OR PRINTS OR OTHER REPRODUCTIONS THEREOF OR FOR THE MAKING OF APPARATUS OR PARTS THEREOF EXCEPT UPON WRITTEN PERMISSION OF CAMBRIDGE INSTRUMENTS INC. FIRST OBTAINED SPECIFIC AS TO EACH CASE. THE ACCEPTANCE OF THIS DRAWING WILL BE CONSTRUED AS AN ACCEPTANCE OF THE FOREGOING AGREEMENT.

LAST COMPONENT REF No USED

R23 C11 L4

T1 I/C

LK1 D12 L4

TR12 RL2

C/K No. | DATE | ISSUE

UNLESS OTHERWISE STATED ALL RESISTORS ARE 1/2 WATT. 2% TOLERANCED.

TITLE

HEATER INVERTER PCB CIRCUIT DIAGRAM

DRN | DATE | APP | DATE | TRACED | DATE | CHKD | DATE 10-7-86

CAMBRIDGE INSTRUMENTS LIMITED

PRODUCT S360 | CODE

CIRCUIT DIAGRAM No. A1 853568 Sht 1

SHT OF

23

DRAWING No.
A1 - 853312
USED ON
EHT GUN SUPPLY
713876

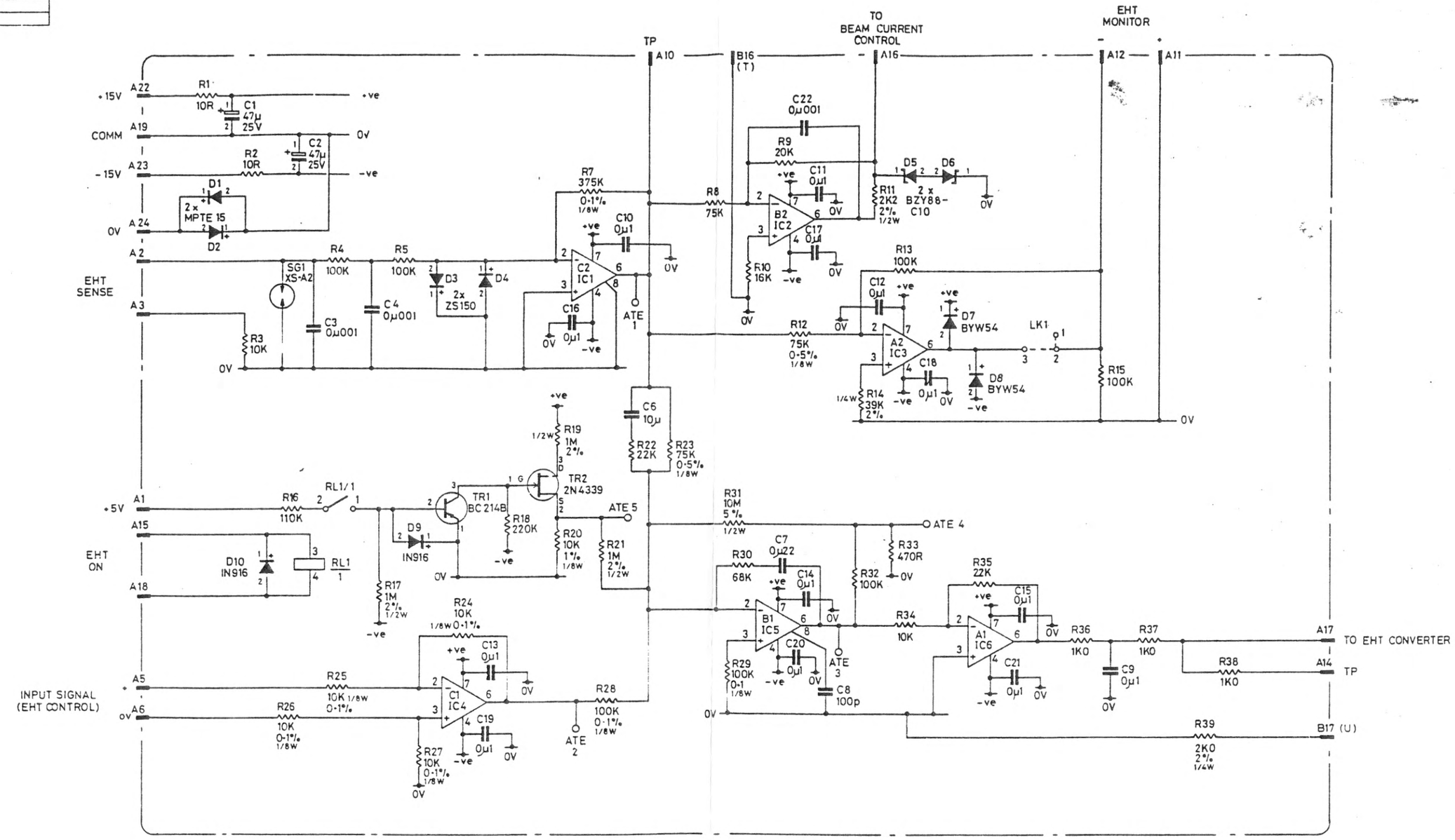

Grid	I.C.	Type
A1	IC6	UA741CP
A2	IC3	OP07
B1	IC5	LM308AN
B2	IC2	TL081CP
C1	IC4	OP07
C2	IC1	OPA111 AM

© CAMBRIDGE INSTRUMENTS LIMITED 1986.
THIS DRAWING IS THE PROPERTY OF THE CAMBRIDGE INSTRUMENT CO. LTD GROUP OF COMPANIES WHICH INCLUDE CAMBRIDGE INSTRUMENTS LTD U.K. CAMBRIDGE INSTRUMENTS GMBH WEST GERMANY. CAMBRIDGE INSTRUMENTS SARL FRANCE. CAMBRIDGE INSTRUMENTS INC U.S.A. THIS DRAWING SHALL NOT BE COPIED OR REPRODUCED IN ANY FORM TO THIRD PERSONS WITHOUT WRITTEN PERMISSION FROM CAMBRIDGE INSTRUMENTS LIMITED.
IN THE U.S.A. THIS DRAWING IS LOANED WITH THE EXPRESSED AGREEMENT THAT THE DRAWING AND INFORMATION THEREIN CONTAINED ARE THE PROPERTY OF CAMBRIDGE INSTRUMENTS INC AND WILL NOT BE REPRODUCED COPIED OR OTHERWISE DISPOSED OF DIRECTLY AND WILL NOT BE USED IN WHOLE OR IN PART TO ASSIST IN MAKING OR TO FURNISH ANY INFORMATION FOR THE MAKING OF DRAWINGS OR PRINTS OR OTHER REPRODUCTIONS THEREOF OR FOR THE MAKING OF APPARATUS OR PARTS THEREOF EXCEPT UPON WRITTEN PERMISSION OF CAMBRIDGE INSTRUMENTS, INC. FIRST OBTAINED SPECIFIC AS TO EACH CASE. THE ACCEPTANCE OF THIS DRAWING WILL BE CONSTRUED AS AN ACCEPTANCE OF THE FOREGOING AGREEMENT.

S360 EHT CONTROL PCB
CIRCUIT DIAGRAM

CAMBRIDGE INSTRUMENTS
LIMITED

S360

A1 - 853312
Sht 1

DRAWING No
A1 853586

USED ON
713876

PROJECTION

DO NOT SCALE

ENGPER	AMEND MOD	INIT IAL	DATE	ISSUE
84/004	INITIAL	CJW	29-6-84	1/-
84/004	24560	MC	11.1.85	1/A

+50V T.P. 7
+48V dc 9
+48V dc 8
0V 11
+15V 22
S
CONTROL 15
0V 24
-15V 23
N
TRIP R
DRIVE 1 A
E.H.T. ON 17
I/P CONTROL COMM 18
-24V 21

R1 1K0 2·5W 5%
D1 3SF2
D2 3SF2
+50V
C1 100µ 100V
R2 47K 0·6W 1%
C2 100µ 100V
R28 10R
C9 0µ1
C5 47µ 25V
R35 22K ¼W 0·1%
R32 22K ⅛W 0·1%
R33 22K ⅛W 0·1%
R36 22K ⅛W 0·1%
IC1a LF353 D1
IC1b LF353 D1
R10 1M0
C4 0µ01
R11 1K0 0·6W 1%
R12 10K
R13 1K0 0·6W 1%
R29 10R
C7 47µ 25V
C8 0µ1
C13 47µ 25V
D13 BAV20
RL1 1
RL1/1
R25 47R
R25 2K2
PP3

c 12
b 14
e 13

R6 0R47 10W 5%
R7 1K0 0·6W 1%
D3 BAV20
TR1 BC 214B
R8 390R
R9 100R
D15 BAV 20
TR2 BFW44
PP1
R14 1K8
TR3 ZN 1893
R16 4K7 0·6W 1%
R15 1K0 0·6W 1%
D14 BAV 20
C6 100µ 100V
R30 1K0 2·5W 5%
TR8 BFY50
D4 BAV 20
R31 56K 0·6W 1%
R17 10K
T1
4S 40T 2F
7F 8T 8S
6S 8T 5F 9/10
PP10 R18 82R PP12 TR9 BFY 50
D5 1N916
D8 BYV 95C
C10 10µ
PP11 R19 82R PP13 TH10 BFY 50
D6 1N916
D7 BYV 95C
C11 10µ
C3‡ 0µ1
R3 * 10R
R27 1K0 2·5W 5%

2 T.P.
5
4
3
D
6
1
10 0V

PP5 PP6
R24 10K PP2 TR16 BC214B
TR15 BC214B
PP4
C12 47µ 25V
TR11 BC 214 B
PP9 R20 10K
TR12 BC214B
PP8 R21 2K2
P DRIVE 2
PP7
D11 1N916
D12 1N916
R4 100R
TR14 BC214B
R5 100R
TR13 BC 214B
D10 BAV20
D9 BAV20
R23 10K
R22 10K
L1 100µH
J V-
16

PP1 = Probe Point 1 (typical)
* INFORMATION SHOWN FOR REF. ONLY (FOR CONVERSION TO S250)
‡ THESE COMPONENTS ARE NOT FITTED ON THIS ASSY., SHOWN FOR REF. ONLY (FOR CONVERSION TO S 250.)

* For S250 remove R32, remove R33 and replace with a wire link. Replace R36 with a 1M resistor

© CAMBRIDGE INSTRUMENTS LIMITED 1985.
THIS DRAWING IS THE PROPERTY OF THE CAMBRIDGE INSTRUMENT CO. LTD. GROUP OF COMPANIES WHICH INCLUDE CAMBRIDGE INSTRUMENTS LTD., U.K., CAMBRIDGE INSTRUMENTS GMBH WEST GERMANY, CAMBRIDGE INSTRUMENTS SARL, FRANCE, CAMBRIDGE INSTRUMENTS INC. U.S.A. THIS DRAWING SHALL NOT BE COPIED OR REPRODUCED IN ANY FORM TO THIRD PERSONS WITHOUT WRITTEN PERMISSION FROM CAMBRIDGE INSTRUMENTS LIMITED.
IN THE U.S.A. THIS DRAWING IS LOANED WITH THE EXPRESSED AGREEMENT THAT THE DRAWING AND INFORMATION THEREIN CONTAINED ARE THE PROPERTY OF CAMBRIDGE INSTRUMENT INC. AND WILL NOT BE REPRODUCED, COPIED, OR OTHERWISE DISPOSED OF DIRECTLY, AND WILL NOT BE USED IN WHOLE OR IN PART TO ASSIST IN MAKING OR TO FURNISH ANY INFORMATION FOR THE MAKING OF DRAWINGS OR PRINTS OR OTHER REPRODUCTIONS THEREOF OR FOR THE MAKING OF APPARATUS OR PARTS THEREOF EXCEPT UPON WRITTEN PERMISSION OF CAMBRIDGE INSTRUMENTS INC. FIRST OBTAINED SPECIFIC AS TO EACH CASE. THE ACCEPTANCE OF THIS DRAWING WILL BE CONSTRUED AS AN ACCEPTANCE OF THE FOREGOING AGREEMENT.

LAST COMPONENT REF. No USED			
R36	C13	L1	
T1	IC1	D15	
TR16	RL1		

© CAMBRIDGE INSTRUMENTS LTD. 1985

DRN. Elmore DATE 11.12.85	CONFIDENTIAL	MATERIAL:	TOLERANCES UNLESS OTHERWISE STATED DECIMAL FRACTIONS & WHOLE NUMBERS ANGULAR	CAMBRIDGE INSTRUMENTS LTD.
DESIGN ENG. A-J. DATE 9-7-86				
APPROVED. P.E.D. M.R. DATE 25-7-86		PROTECTIVE FINISH	DIMENSIONS IN UNLESS OTHERWISE STATED SURFACE ROUGHNESS UNLESS OTHERWISE STATED	TITLE E.H.T. INVERTER P.C.B. CIRCUIT DIAGRAM

UNLESS OTHERWISE STATED ALL RESISTORS ARE 1/2 WATT, 2% TOLERANCED

SCALE:

DRAWING No.
A1 853586
SHT 1

SIZE A1
HARPER AND TUNSTALL PDS 8256

A2 853306
USED ON
713876

PROJECTION

INITIAL			

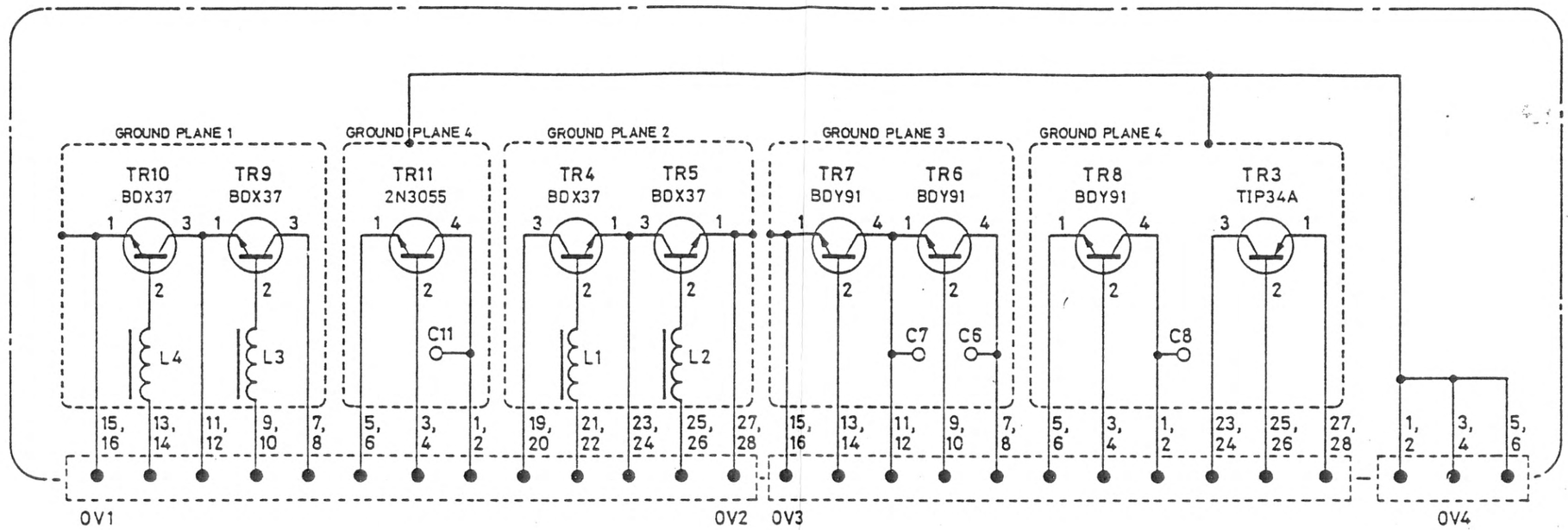

© CAMBRIDGE INSTRUMENTS LTD. 1985.

0 INCHES 1
0 10 20 30
mm

~~THIS DRAWING CONFORMS TO B.S.308:1972~~
~~REMOVE BURRS FROM SHARP EDGES AND CORNERS~~
~~USING.....RAD. MAX.~~

CONFIDENTIAL
This document is the property of Cambridge Instruments Ltd
Its contents must not be copied or communicated to a third party without written permission.

MATERIAL:	TOLERANCES (UNLESS OTHERWISE STATED) DECIMAL ± FRACTIONS & WHOLE NUMBER ± ANGULAR ±	DRAWN: E.L. DATE 22.3.85	DESIGN ENG.CKD DATE 1-9-85	PROD. CHKD: DATE 11-9-85	APPROVED: DATE	SCALE: /
PROTECTIVE FINISH	DIMENSIONS IN UNLESS OTHERWISE STATED	CAMBRIDGE INSTRUMENTS LTD.				DRAWING No. A2 853306 Sht 1
	SURFACE ROUGHNESS UNLESS OTHERWISE STATED	TITLE S360 INVERTER/REGULATOR PCB CIRCUIT DIAGRAM				ISSUE

SIZE A2

HARPER AND TUMSTALL LIMITED

A1 853566 SHT 1

713876

PP1 = Probe point 1 (typical)

BEAM CURRENT CONTROL 'W'

Grid	I.C.	Type
A4	6	ILCA2-30
B2	1a	LF353
B2	1b	LF353
B3	2a	LF353
B3	2b	LF353
C1a	3	TL081
C1b	5	LF351
D1	4	NOT FITTED *

*THESE COMPONENTS ARE NOT FITTED ON THIS ASSY., SHOWN FOR REF. ONLY. INFORMATION IN DOTTED BOXES SHOWN FOR REF. ONLY (FOR CONVERSION TO S250 EQUIPT)

LK1*	FIT LINK ON S250 ONLY	R38, 44	SHORT ACROSS (LINK) POSN.
IC4* etc.	IC4* R27* 28* 29* D18* 19*		FOR S250, (R5 NOT REQ'D)
	FIT ON S250 ONLY	R40, 43	NOT REQUIRED FOR S250
R25	10K0 ON S250 ONLY	R5	20K ON S250 ONLY
0V.A	TRACK CUT/ISOLATED FROM EDGE CONN. PIN "U" TO 0V.A ON S250 ONLY	R7	130K ON S250 ONLY
		R8 *	FIT ON S250 ONLY
		LK2*	FIT LINK ON S250 ONLY
R45	100K ON S250 ONLY	R39	100K ON S250 ONLY
LK4	REMOVE FOR S250		

© CAMBRIDGE INSTRUMENTS LIMITED 1986
THIS DRAWING IS THE PROPERTY OF THE CAMBRIDGE INSTRUMENT CO. LTD. GROUP OF COMPANIES WHICH INCLUDE CAMBRIDGE INSTRUMENTS LTD. U.K., CAMBRIDGE INSTRUMENTS GMBH, WEST GERMANY, CAMBRIDGE INSTRUMENTS SARL, FRANCE, CAMBRIDGE INSTRUMENTS INC. U.S.A. THIS DRAWING SHALL NOT BE COPIED OR REPRODUCED IN ANY FORM TO THIRD PERSONS WITHOUT WRITTEN PERMISSION FROM CAMBRIDGE INSTRUMENTS LIMITED.
IN THE U.S.A. THIS DRAWING IS LOANED WITH THE EXPRESSED AGREEMENT THAT THE DRAWING AND INFORMATION THEREIN CONTAINED ARE THE PROPERTY OF CAMBRIDGE INSTRUMENTS INC. AND WILL NOT BE REPRODUCED, COPIED OR OTHERWISE DISPOSED OF DIRECTLY, AND WILL NOT BE USED IN WHOLE OR IN PART TO ASSIST IN MAKING OR TO FURNISH ANY INFORMATION FOR THE MAKING OF DRAWINGS OR PRINTS OR OTHER REPRODUCTIONS THEREOF OR FOR THE MAKING OF APPARATUS OR PARTS THEREOF EXCEPT UPON WRITTEN PERMISSION OF CAMBRIDGE INSTRUMENTS INC. FIRST OBTAINED SPECIFIC AS TO EACH CASE. THE ACCEPTANCE OF THIS DRAWING WILL BE CONSTRUED AS AN ACCEPTANCE OF THE FOREGOING AGREEMENT.

BEAM CURRENT P.C.B.
CIRCUIT DIAGRAM

CAMBRIDGE INSTRUMENTS LIMITED

A1 853566
Sht 1

DRAWING No. A2-852472

USED ON

S250

PROJECTION

AMEND/MOD	INIT-IALS	DATE	ISSUE
PROD ISSUE	KRB	11-5-82	1/1
CN 16630	JWH	4-3-83	2/2
24551	SKH	21-12-87	3

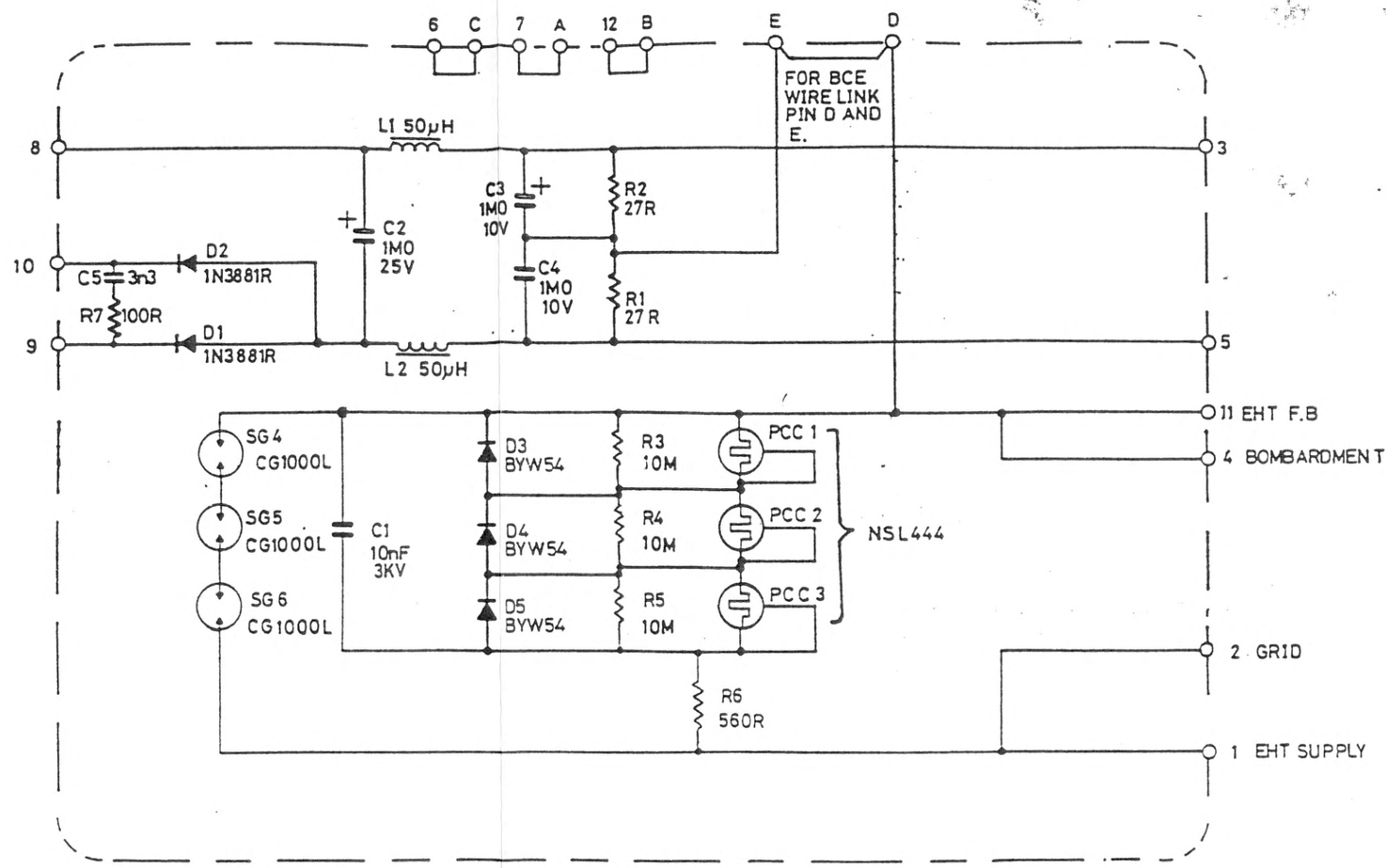

INCHES 0 10 20 30 mm

THIS DRAWING CONFORMS TO B.S 308 1972

REMOVE BURRS FROM SHARP EDGES AND CORNERS

USING / RAD. MAX.

© THE CAMBRIDGE INSTRUMENT CO LTD 1982

CONFIDENTIAL
This document is the property of The Cambridge Instrument Company. Its contents must not be copied or communicated to a third party without written permission

MATERIAL: /

PROTECTIVE FINISH /

TOLERANCES UNLESS OTHERWISE STATED: DECIMAL ± / FRACTIONS & WHOLE NUMBERS ± / ANGULAR ±

DIMENSIONS IN UNLESS OTHERWISE STATED /

SURFACE ROUGHNESS: UNLESS OTHERWISE STATED /

DRAWN: KRB	DESIGN ENG CKD.	PROD. CHKD:	APPROVED:	SCALE:
DATE 11-5-82	DATE 16-5-82 TWR	DATE	DATE	/

THE CAMBRIDGE INSTRUMENT COMPANY GROUP OF COMPANIES
THE CAMBRIDGE INSTRUMENT COMPANY
CAMBRIDGE ENGLAND

TITLE EHT BOX

DRAWING No. A2-852472 ISSUE

SIZE A2

DRAWING No. A1-853982 - ISSUED ON 713876

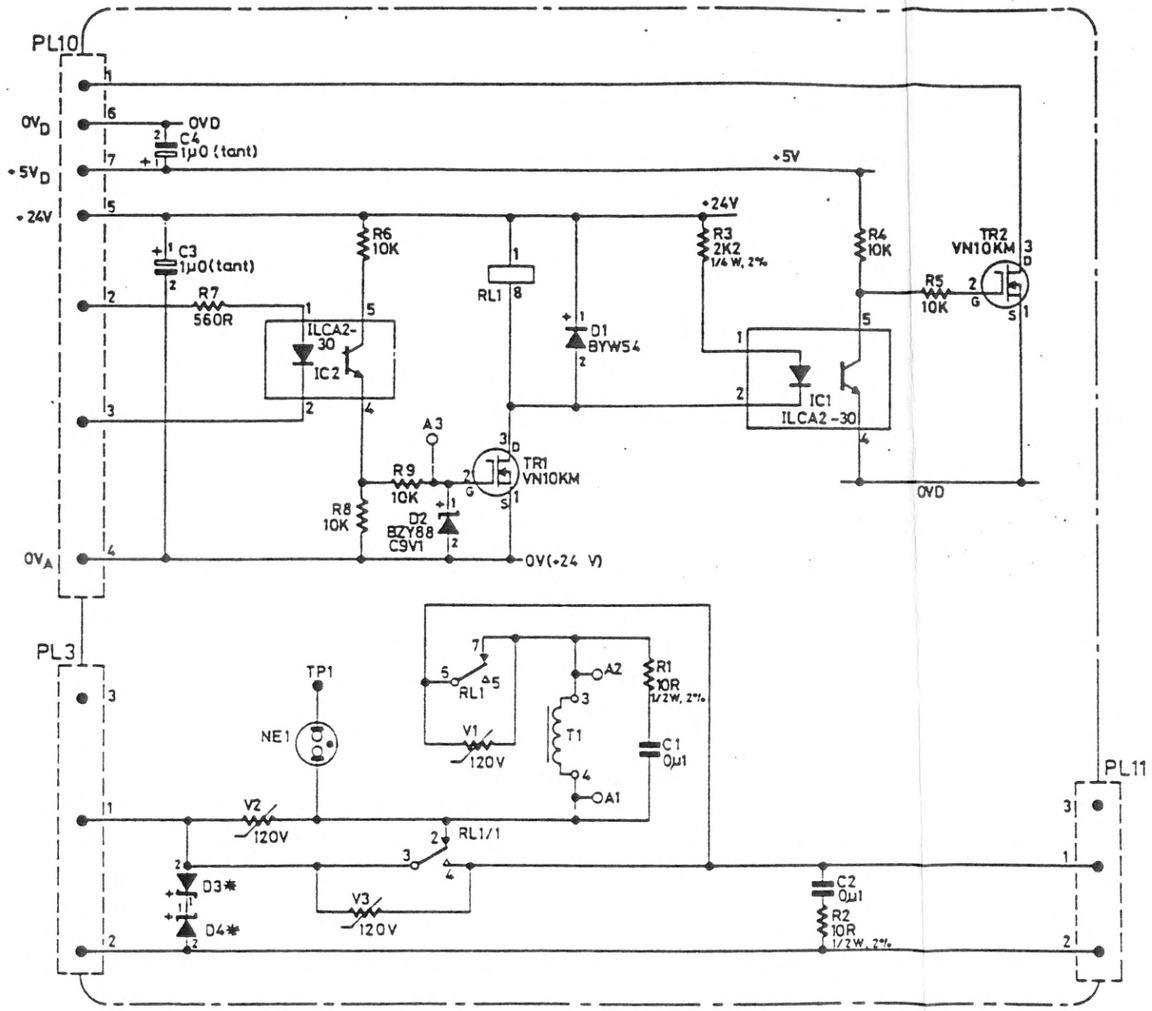

* D3 & D4 NOT TO BE FITTED

©CAMBRIDGE INSTRUMENTS LIMITED 1986.
THIS DRAWING IS THE PROPERTY OF THE CAMBRIDGE INSTRUMENT CO. LTD. GROUP OF COMPANIES WHICH INCLUDE CAMBRIDGE INSTRUMENTS LTD., U.K., CAMBRIDGE INSTRUMENTS GMBH, WEST GERMANY, CAMBRIDGE INSTRUMENTS S.A.R.L. FRANCE, CAMBRIDGE INSTRUMENTS INC. U.S.A. THIS DRAWING SHALL NOT BE COPIED OR REPRODUCED IN ANY FORM TO THIRD PERSONS WITHOUT WRITTEN PERMISSION FROM CAMBRIDGE INSTRUMENTS LIMITED.
IN THE U.S.A. THIS DRAWING IS LOANED WITH THE EXPRESSED AGREEMENT THAT THE DRAWING AND INFORMATION THEREIN CONTAINED ARE THE PROPERTY OF CAMBRIDGE INSTRUMENTS INC. AND WILL NOT BE REPRODUCED, COPIED, OR OTHERWISE DISPOSED OF DIRECTLY, AND WILL NOT BE USED IN WHOLE OR IN PART TO ASSIST IN MAKING OR TO FURNISH ANY INFORMATION FOR THE MAKING OF DRAWINGS OR PRINTS OR FOR REPRODUCTIONS THEREOF OR FOR THE MAKING OF APPARATUS OR PARTS THEREOF EXCEPT UPON WRITTEN PERMISSION OF CAMBRIDGE INSTRUMENTS INC. FIRST OBTAINED SPECIFIC AS TO EACH CASE. THE ACCEPTANCE OF THIS DRAWING WILL BE CONSTRUED AS AN ACCEPTANCE OF THE FOREGOING AGREEMENT.

LAST COMPONENT REF No USED
R9 C4 IC
T1 VC2
TR2

ISSUE	DATE	INITIAL	C/N No.
A-7	25523		
2	21/6/86		
1			

UNLESS OTHERWISE STATED ALL RESISTORS ARE 0.6 WATT. 1% TOLERANCED.

TITLE: HIGH/LOW KV PCB CIRCUIT DIAGRAM

	DATE
DRN	n. d. 85
APP A-7	21-6-86
TRACED	n/k/pc
CHKD	2-10-86

CAMBRIDGE INSTRUMENTS LIMITED

PRODUCT S360 CODE

CIRCUIT DIAGRAM No. A1-853982 Sheet 1 SHT 30 OF

DRAWING No. A1 853410 SHT 1

USED ON 713876

PART OF S1

1A,B,C 48V
2A,B,C 0V(48)
3A +5V
3C 0V(5)
30A,B,C +15V
32A,B,C $0V_A$
31A,B,C -15V
28A,B,C +24V
27A,B,C $0V_D$
29A,B,C -24V

C1 4µ7, C2 0µ1, C3 10µ, C4 0µ1, C5 33µ, C6 0µ1, C7 33µ, C8 0µ1, C30 0µ1, C29 0µ1

VREF (E,8)

R1 619R 1/8W,0-5%
R2 1K2 1/8W,0-5% (+5V)
R3 17K8 1/8W,0-1% (+48V)
R4 6K19 1/8W,0-25% (+15V)
R5 15K 1/8W,0-1% (-15V)
R6 1K21 1/8W,0-5% (0V(5))
R7 1K21 1/8W,0-25% (0V(48))
R8 1K24 1/8W,0-1% ($0V_A$)
R9 2K49 1/8W,0-5%
R10 127R 1/8W 0-1%
R11 2K4 1/4W 0-1%
R12 4K7 (+5V)

C9 0µ1 ($0V_A$)
C10 4µ7 ($0V_A$)

E1 SG3548N
SENSE 1 OVERVOLTAGE
SENSE 2 UNDERVOLTAGE
SENSE 3
INV I/P VREF
INV OUT
SENSE 4 LTHRESH
LINE SENSE
GND (0V (5V))
DELAY
COLLECT.

OVERVOLTAGE LD10 R13 330R 1/2W 2%
UNDERVOLTAGE LD11 R14 330R 1/2W 2%

+24V R15 10K 1/8W,0-5%
R16 237R 1/8W 0-25%
R17 1K1 1/8W 0-5%
R18 10K 1/8W,0-5%
R19 1K96 1/8W 0-5%
R20 100K 1/8W,0-5% (-24V)
D33 1N916 ($0V_D$)
C11 0µ1 (+15V, $0V_A$)

C2 UNDERVOLTAGE, OVERVOLTAGE, Gnd, V-

LD1 LD2 LD3 LD4 LD5 LD6 LD7 LD8 LD9 LD13 LD14 (+5V)
11 x 330R 1/2W 2% R21 R22 R23 R24 R25 R26 R27 R28 R29 R73 R74

8A OPTION Z ON
7C OPTION I ON
7A CATHODE ON
7B PM ON
9C GUN BIAS ON
8B BEAM I ON
9B FIL ON
9A E.H.T. TRIP
8C E.H.T. ON
10C LAB6 ON
10A
6B
PART OF S1

C12 1µ0, C13 0µ1, R30 5K1 1/4W 2%, RV1 20K
TM555 B3: Vcc, Reset, Osc, OP, Trigger, Thresh.
C26 0µ001, C14 0µ01
0V (5)

AT2
C3 74HC74: R, D, Clk, S, Q, $\overline{Q}$, Vcc, Gnd
C15 0µ1 (+5V, 0V(5))
R32 4K7, R33 4K7, R34 4K7, R35 4K7 (+5V)
R37 10K, R38 10K
R40 10K, C19 0µ1, R39 4K7, C20 0µ1 (-15V, $0V_A$)
R36 10K, R41 4K7 ($0V_A$)

TR1 2N1893 (+48V)
R68 20K
R67 2K0 1/4W 2%
0V(48), $0V_A$

C21 0µ1, C22 0µ1 ($0V_A$)
A3 AD7502: Gnd, Vdd, Vss, EN, A1, A0
D1 D3 D5 D7 D9 D11 D13 D15 8 x 1N916 (+15V)
D2 D4 D6 D8 D10 D12 D14 D16 8 x 1N916 (-15V)
R59 R60 R61 R62 R63 R64 R65 R66 8 x 10K
LK2 LKG2, LK3 LKG3
D3 M3 M2 M1

C31 0µ1, C32 0µ1 ($0V_A$)
A1 AD7502: Gnd, Vdd, Vss, EN, A1, A0
D17 D19 D21 D23 D25 D27 D29 D31 8 x 1N916 (+15V)
D18 D20 D22 D24 D26 D28 D30 D32 8 x 1N916 (-15V)
R51 R52 R53 R54 R55 R56 R57 R58 8 x 10K
LK4 LKG4, LK5 LKG5, LK6 LKG6, LK7 LKG7
M3 M2 M1

E2 SPARE: C28 0µ1 (+5V, 0V(5))

C16 1µ0, C17 0µ1 (0V(5))
AT1, LK1, LD12, BUZZER BZ1
TM555 E3: Vcc, Osc, Trigger, Thresh., OP, Reset
C23 0µ01, C18 1µ0 (0V(5))
R43 330K 1/2W 2%, R44 680K 1/2W 2%
R42 4K7, D3
C27 0µ1 (0V(5))
R69 4K7, R70 4K7, D3

R72 4K7, R71 4K7, R45 4K7 (M3 M2 M1)
R49 100K 1/8W 0-1%, R48 100K 1/8W 0-1%, R50 110K 1/8W 0-1%
A2: R47 110K 1/8W,0-1%, C25 0µ1, C24 0µ1 (+15V, -15V, $0V_A$)

D37 2 x IN916 D38 (+15V, -15V, $0V_A$)

WATCHDOG FROM I/F P.C.B 19B
SELECT FROM I/F P.C.B 21B 21A 20B
TO I/F P.C.B. 23C 23A

4A, 5A, 6C ($0V_A$)
16C+ 17C- EHT CONT
18A+ 19A- FIL CONT
16A+ 17A- BEAM CONT
18C+ 19C- GUN BIAS CONT
12C+ 13C- PM CONT
12A+ 13A- CATHODE CONT
14A+ 15A- OPTION 1 CONT
14C+ 15C- OPTION 2 CONT

PART OF S1

	A	B	C	D	E
1	IC10 AD7502				IC1 SG3548N
2	IC11 OP07EP	IC8 LF353N	IC2 LM339		IC 7 SPARE DIL 20
3	IC9 AD7502	IC4 TM555	IC6 74HC74	IC3 74HC00	IC5 TM555

© CAMBRIDGE INSTRUMENTS LIMITED 1985.
THIS DRAWING IS THE PROPERTY OF THE CAMBRIDGE INSTRUMENT CO. LTD. GROUP OF COMPANIES WHICH INCLUDE CAMBRIDGE INSTRUMENTS LTD., U.K., CAMBRIDGE INSTRUMENTS GMBH, WEST GERMANY, CAMBRIDGE INSTRUMENTS S.A.R.L., FRANCE, CAMBRIDGE INSTRUMENTS INC., U.S.A. THIS DRAWING SHALL NOT BE COPIED OR REPRODUCED IN ANY FORM TO THIRD PERSONS WITHOUT WRITTEN PERMISSION FROM CAMBRIDGE INSTRUMENTS LIMITED.
IN THE U.S.A. THIS DRAWING IS LOANED WITH THE EXPRESSED AGREEMENT THAT THE DRAWING AND INFORMATION THEREIN CONTAINED ARE THE PROPERTY OF CAMBRIDGE INSTRUMENTS INC. AND WILL NOT BE REPRODUCED, COPIED, OR OTHERWISE DISPOSED OF DIRECTLY, AND WILL NOT BE USED AS WHOLE OR IN PART TO ASSIST IN MAKING OR TO FURNISH ANY INFORMATION FOR THE MAKING OF DRAWINGS OR PRINTS OR OTHER REPRODUCTIONS THEREOF OR FOR THE MAKING OF APPARATUS OR PARTS THEREOF EXCEPT UPON WRITTEN PERMISSION OF CAMBRIDGE INSTRUMENTS INC. FIRST OBTAINED SPECIFIC AS TO EACH CASE. THE ACCEPTANCE OF THIS DRAWING WILL BE CONSTRUED AS AN ACCEPTANCE OF THE FOREGOING AGREEMENT.

LAST COMPONENT REF No USED
R 74 C 32 L ...
T ... VC 11 ...
D38, LD13, TR1
LKG7

UNLESS OTHERWISE STATED ALL RESISTORS ARE 0·6W WATT 1% TOLERANCED.

TITLE: E.H.T. GUN SUPPLY STATUS P.C.B CIRCUIT DIAGRAM

DRN JL DATE 5.1.86
APP DATE 9.8.86
TRACED DATE
CHKD DATE 6-10-86
PRODUCT S 360 CODE

CAMBRIDGE INSTRUMENTS LIMITED

CIRCUIT DIAGRAM No. A1 853410 SHT 1 OF

34

DRAWING No
A1 - 854558
USED ON

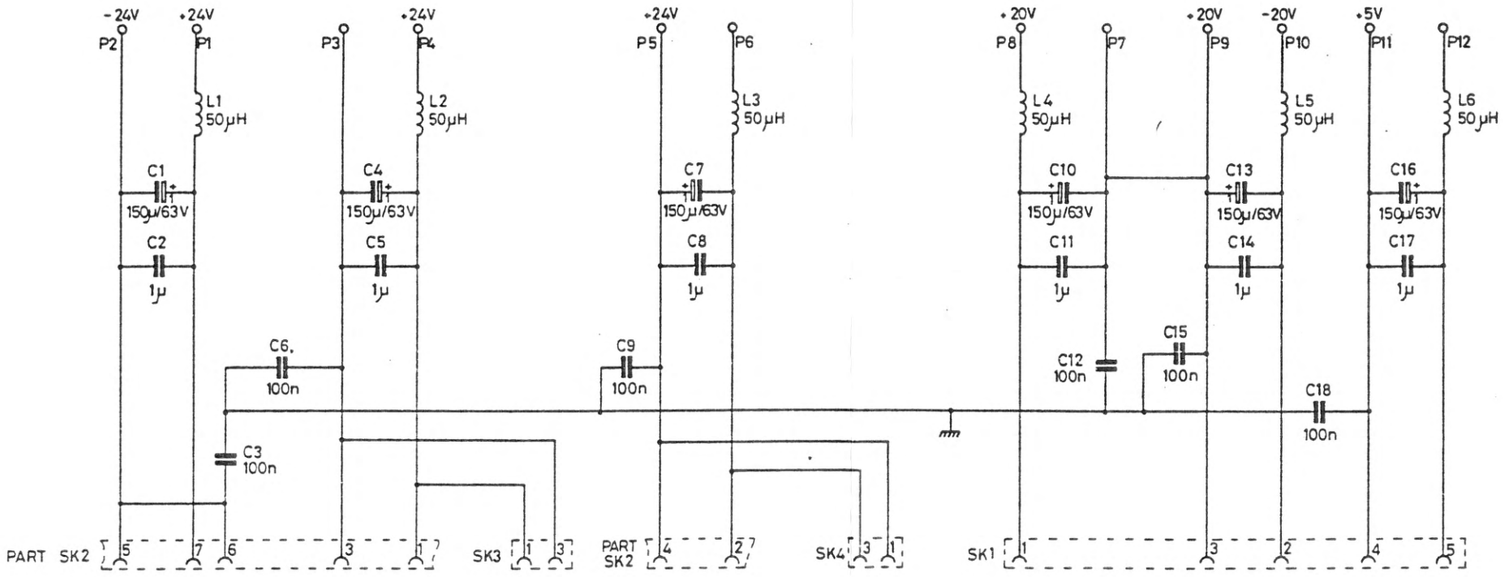

			PED
			ENG.
			PCA
3	40193		C/N No
2	28.3.85		DATE
1	9.2.85		ISSUE

© CAMBRIDGE INSTRUMENTS LIMITED 1989.
THIS DRAWING IS THE PROPERTY OF THE CAMBRIDGE INSTRUMENT CO. LTD. GROUP OF COMPANIES WHICH INCLUDE CAMBRIDGE INSTRUMENTS LTD., U.K., CAMBRIDGE INSTRUMENTS GMBH, WEST GERMANY, CAMBRIDGE INSTRUMENTS SARL, FRANCE, CAMBRIDGE INSTRUMENTS INC. U.S.A. THIS DRAWING SHALL NOT BE COPIED OR REPRODUCED IN ANY FORM TO THIRD PERSONS WITHOUT WRITTEN PERMISSION FROM CAMBRIDGE INSTRUMENTS LIMITED.
IN THE U.S.A. THIS DRAWING IS LOANED WITH THE EXPRESSED AGREEMENT THAT THE DRAWING AND INFORMATION THEREIN CONTAINED ARE THE PROPERTY OF CAMBRIDGE INSTRUMENTS INC. AND WILL NOT BE REPRODUCED, COPIED, OR OTHERWISE DISPOSED OF DIRECTLY, AND WILL NOT BE USED IN WHOLE OR IN PART TO ASSIST IN MAKING OR TO FURNISH ANY INFORMATION FOR THE MAKING OF DRAWINGS OR PRINTS OR OTHER REPRODUCTIONS THEREOF OR FOR THE MAKING OF APPARATUS OR PARTS THEREOF EXCEPT UPON WRITTEN PERMISSION OF CAMBRIDGE INSTRUMENTS INC. FIRST OBTAINED SPECIFIC AS TO EACH CASE. THE ACCEPTANCE OF THIS DRAWING WILL BE CONSTRUED AS AN ACCEPTANCE OF THE FOREGOING AGREEMENT.

LAST COMPONENT REF No
USED
R C.18 L6
T I/C

UNLESS OTHERWISE STATED ALL RESISTORS ARE 1/2 WATT 2% TOLERANCED

TITLE
COUTANT PSU SMOOTHING

DRN J.B.W.	DATE	CAMBRIDGE INSTRUMENTS LIMITED	CIRCUIT DIAGRAM No A1-854558 Sheet 1
APP R.J.S.	DATE		SHT OF
TRACED	DATE		
CHKD	DATE	PRODUCT	CODE

32

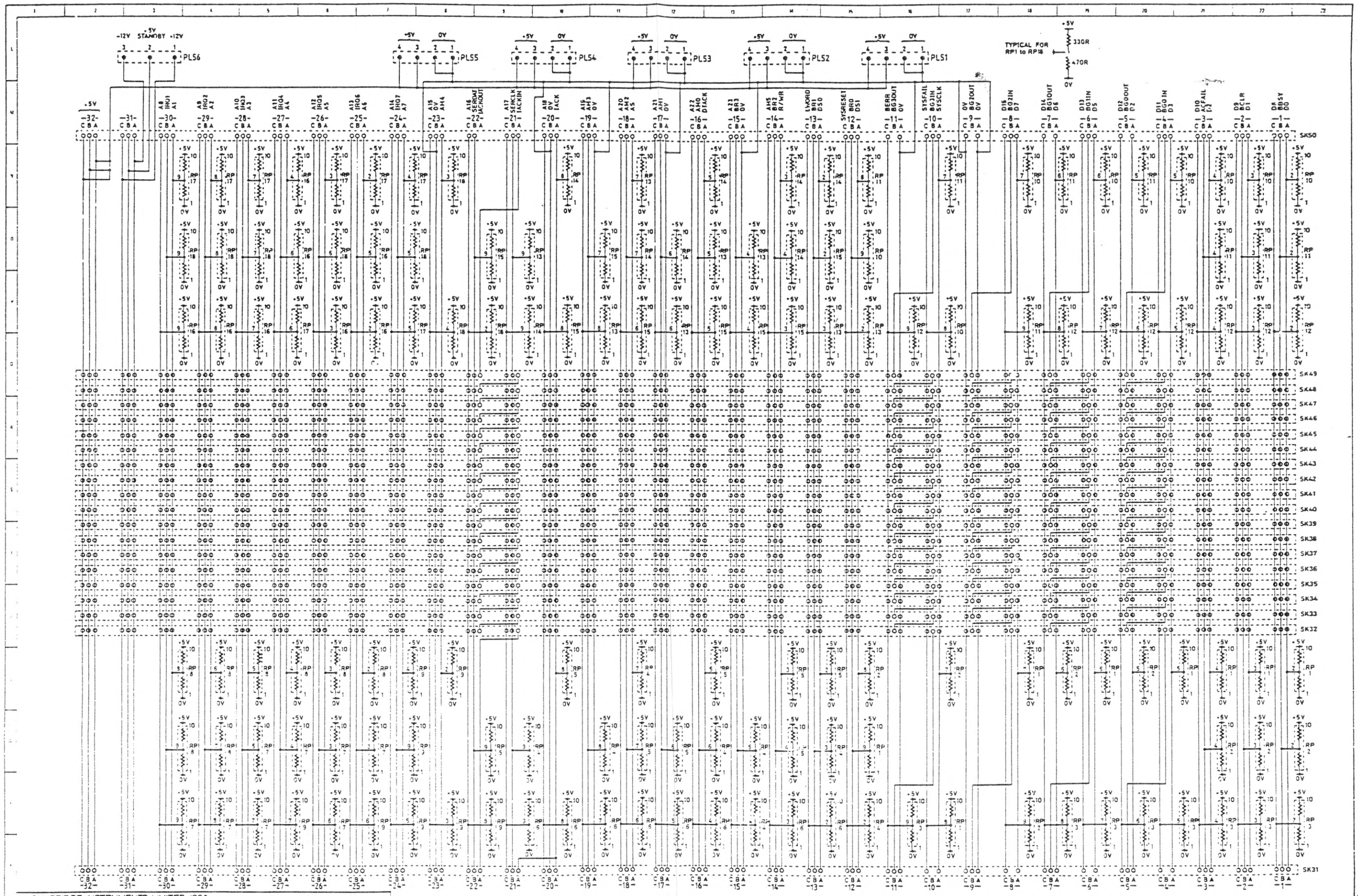

CAMBRIDGE INSTRUMENTS LIMITED 1986.
THIS DRAWING IS THE PROPERTY OF THE CAMBRIDGE INSTRUMENT CO LTD GROUP OF COMPANIES WHICH INCLUDE CAMBRIDGE INSTRUMENTS LTD. U.K., CAMBRIDGE INSTRUMENTS GMBH WEST GERMANY, CAMBRIDGE INSTRUMENTS SARL FRANCE, CAMBRIDGE INSTRUMENTS INC U.S.A. THIS DRAWING SHALL NOT BE COPIED OR REPRODUCED IN ANY FORM TO THIRD PERSONS WITHOUT WRITTEN PERMISSION FROM CAMBRIDGE INSTRUMENTS LIMITED.
IN THE U.S.A. THIS DRAWING IS LOANED WITH THE EXPRESSED AGREEMENT THAT THE DRAWING AND INFORMATION THEREIN CONTAINED ARE THE PROPERTY OF CAMBRIDGE INSTRUMENTS INC AND WILL NOT BE REPRODUCED, COPIED OR OTHERWISE DISPOSED OF DIRECTLY OR INDIRECTLY, AND WILL NOT BE USED IN WHOLE OR IN PART TO ASSIST IN MAKING OR TO FURNISH ANY INFORMATION FOR THE MAKING UP DRAWINGS OR PRINTS OR OTHER REPRODUCTIONS THEREOF OR FOR THE MAKING OF APPARATUS OR PARTS THEREOF EXCEPT UPON WRITTEN PERMISSION OF CAMBRIDGE INSTRUMENTS INC FIRST OBTAINED SPECIFIC AS TO EACH CASE. THE ACCEPTANCE OF THIS DRAWING WILL BE CONSTRUED AS AN ACCEPTANCE OF THE FOREGOING AGREEMENT.

S360 ELECTRON OPTICS / V.M.E. BACKPLANE
CIRCUIT DIAGRAM

CAMBRIDGE INSTRUMENTS LIMITED

AO 853974

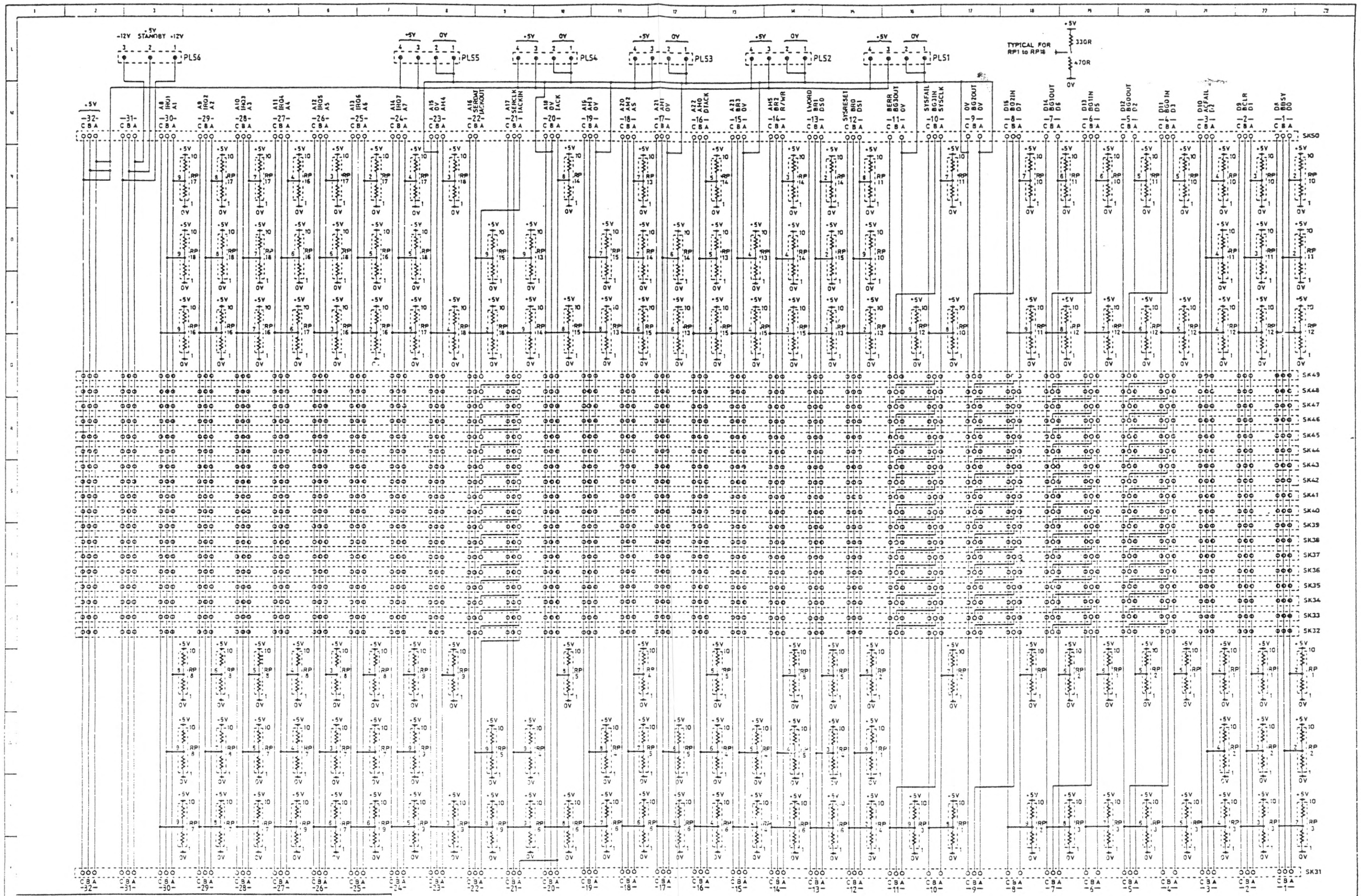

CAMBRIDGE INSTRUMENTS LIMITED 1986.
THIS DRAWING IS THE PROPERTY OF THE CAMBRIDGE INSTRUMENT CO LTD GROUP OF COMPANIES WHICH INCLUDE CAMBRIDGE INSTRUMENTS LTD. U.K., CAMBRIDGE INSTRUMENTS GMBH WEST GERMANY, CAMBRIDGE INSTRUMENTS SARL FRANCE, CAMBRIDGE INSTRUMENTS INC U.S.A. THIS DRAWING SHALL NOT BE COPIED OR REPRODUCED IN ANY FORM TO THIRD PERSONS WITHOUT WRITTEN PERMISSION FROM CAMBRIDGE INSTRUMENTS LIMITED.
IN THE U.S.A. THIS DRAWING IS LOANED WITH THE EXPRESSED AGREEMENT THAT THE DRAWING AND INFORMATION THEREIN CONTAINED ARE THE PROPERTY OF CAMBRIDGE INSTRUMENTS INC AND WILL NOT BE REPRODUCED, COPIED OR OTHERWISE DISPOSED OF DIRECTLY OR INDIRECTLY, AND WILL NOT BE USED IN WHOLE OR IN PART TO ASSIST IN MAKING OR TO FURNISH ANY INFORMATION FOR THE MAKING UP DRAWINGS OR PRINTS OR OTHER REPRODUCTIONS THEREOF OR FOR THE MAKING OF APPARATUS OR PARTS THEREOF (EXCEPT UPON WRITTEN PERMISSION OF CAMBRIDGE INSTRUMENTS INC FIRST OBTAINED SPECIFIC AS TO EACH CASE. THE ACCEPTANCE OF THIS DRAWING WILL BE CONSTRUED AS AN ACCEPTANCE OF THIS FOREGOING AGREEMENT.

S360 ELECTRON OPTICS / V.M.E. BACKPLANE
CIRCUIT DIAGRAM

CAMBRIDGE INSTRUMENTS LIMITED

AO 853974

DRAWING No (2 of 2)
A1 853974 Snt1

USED ON
714681

PL21 PL22 PL26 PL27 PL28 PL25 PL24 PL23

20VR 0VR 20VR 0VR +20V(C) 0V(C) -20V(C) 0V(D) +5V -15V 0V(B) +15V -20V(B) 0V(B) +20V(B) -28V 0V(A) 0V(A) +28V

1 2 3 4 1 2 3 4 1 2 3 2 1 3 4 3 2 1 3 2 1 3 2 1 4 3 2 1 4 3 2 1

+5V
C1-C8
0µ1
0V

SK20 SK19 SK18 SK17 SK16 SK15 SK14 SK13 SK12 SK11 SK10 SK9 SK8 SK7 SK6 SK5 SK4 SK3 SK2 SK1

C B A	C B A	C B A	C B A	C B A	C B A	C B A	C A	B	B	B	B	B	C A	C A	C A	C A	C A	C A	C A	C A	C B A	C B A	C B A	C B A	C B A	C B A	C B A	C B A
-32-	-31-	-30-	-29-	-28-	-27-	-26-	-25-	24	23	22	21	20	-19-	-18-	-17-	-16-	-14-	-13-	-12-	-11-	-10-	-9-	-8-	-7-	-6-	-5-	-4-	-3-	-2-	-1-
20VR	20VR	0VR	0VR	+20V (C)	0V (C)	-20V (C)	0V (D)	+5V	MON SEL	MON SEL	MON SEL	MON SEL	MON SEL	FIL DAC L	CATHODE DAC L	FIL DAC H	CATHODE DAC H	E H T DAC L	PM DAC L	E H T DAC H	PM DAC H	SCAN BUS 2 L	ANA BUS 2 L	SCAN BUS 2 H	ANA BUS 2 H	SCAN BUS 1 L	ANA BUS 1 L	SCAN BUS 1 H	ANA BUS 1 H	-15V 0V (B) +15V	-20V (B)	0V (B)	+20V (B)	-28V	-28V	0V (A)	0V (A)	+28V	+28V

© CAMBRIDGE INSTRUMENTS LIMITED 1988.
THIS DRAWING IS THE PROPERTY OF THE CAMBRIDGE INSTRUMENT CO LTD GROUP OF COMPANIES WHICH INCLUDE CAMBRIDGE INSTRUMENTS LTD., U.K. CAMBRIDGE INSTRUMENTS GMBH WEST GERMANY, CAMBRIDGE INSTRUMENTS SARL FRANCE, CAMBRIDGE INSTRUMENTS INC U.S.A. THIS DRAWING SHALL NOT BE COPIED OR REPRODUCED IN ANY FORM TO THIRD PERSONS WITHOUT WRITTEN PERMISSION FROM CAMBRIDGE INSTRUMENTS LIMITED.
IN THE U.S.A. THIS DRAWING IS LOANED WITH THE EXPRESSED AGREEMENT THAT THE DRAWING AND INFORMATION THEREIN CONTAINED ARE THE PROPERTY OF CAMBRIDGE INSTRUMENTS INC. AND WILL NOT BE REPRODUCED, COPIED OR OTHERWISE DISPOSED OF DIRECTLY AND WILL NOT BE USED IN WHOLE OR IN PART TO ASSIST IN CLAIMING OR TO FURNISH ANY INFORMATION FOR THE MAKING OF DRAWINGS OR PRINTS OR OTHER REPRODUCTIONS THEREOF OR FOR THE MAKING OF APPARATUS OR PARTS THEREOF EXCEPT UPON WRITTEN PERMISSION OF CAMBRIDGE INSTRUMENTS INC. FIRST OBTAINED SPECIFIC AS TO EACH CASE. THE ACCEPTANCE OF THIS DRAWING WILL BE CONSTRUED AS AN ACCEPTANCE OF THE FOREGOING AGREEMENT.

S360 ELECTRON OPTICS/V.M.E.
BACKPLANE CIRCUIT DIAGRAM

CAMBRIDGE INSTRUMENTS LIMITED

A1 853974
Sht 1

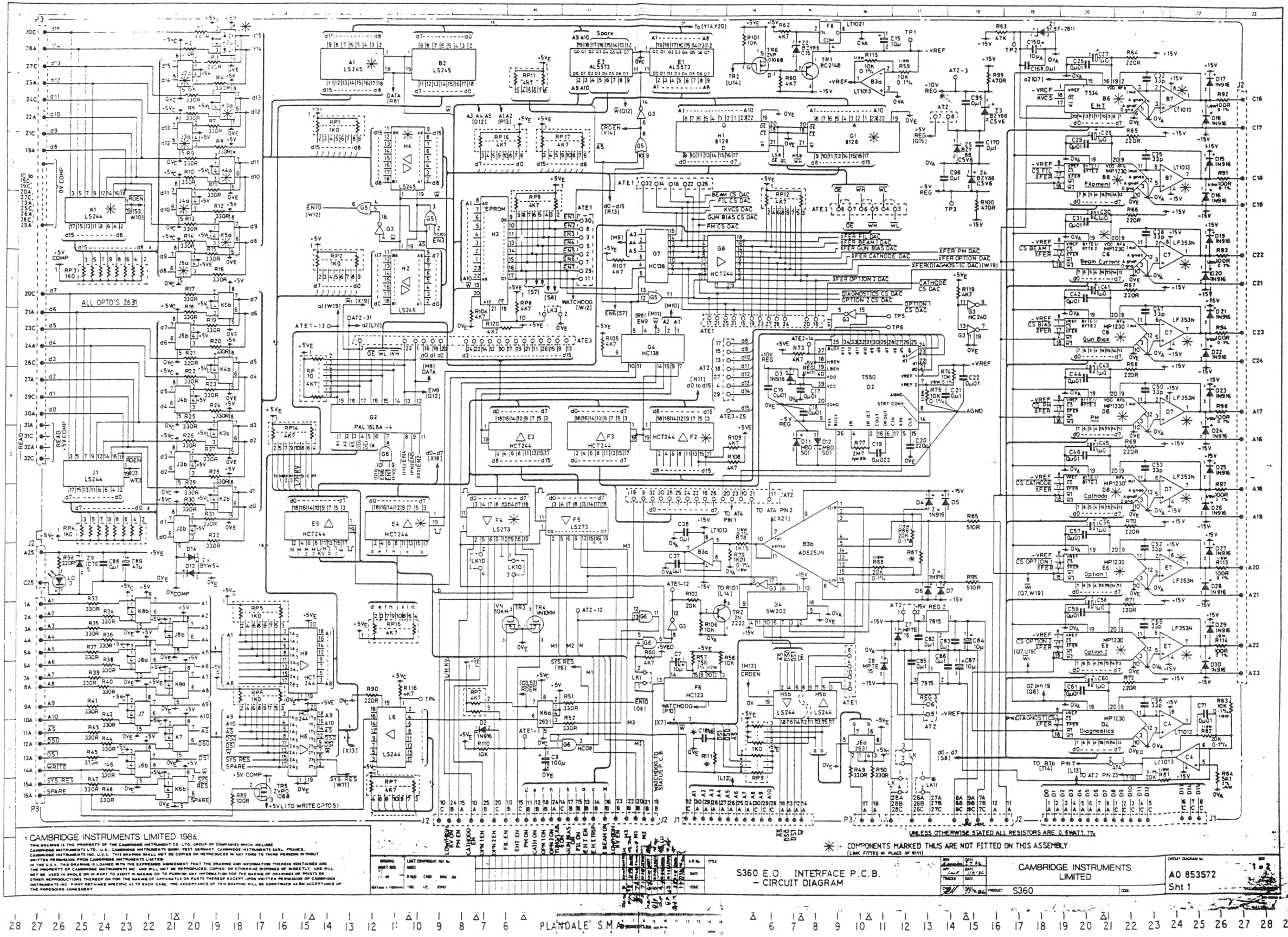

© CAMBRIDGE INSTRUMENTS LIMITED 1986.
THIS DRAWING IS THE PROPERTY OF THE CAMBRIDGE INSTRUMENT CO. LTD. GROUP OF COMPANIES WHICH INCLUDE CAMBRIDGE INSTRUMENTS LTD., U.K., CAMBRIDGE INSTRUMENTS GMBH, WEST GERMANY, CAMBRIDGE INSTRUMENTS S.A.R.L., FRANCE, CAMBRIDGE INSTRUMENTS INC, U.S.A. THIS DRAWING SHALL NOT BE COPIED OR REPRODUCED IN ANY FORM TO THIRD PERSONS WITHOUT WRITTEN PERMISSION FROM CAMBRIDGE INSTRUMENTS LIMITED.
IN THE U.S.A. THIS DRAWING IS LOANED WITH THE EXPRESSED AGREEMENT THAT THE DRAWING AND INFORMATION THEREIN CONTAINED ARE THE PROPERTY OF CAMBRIDGE INSTRUMENTS INC. AND WILL NOT BE REPRODUCED, COPIED, OR OTHERWISE DISPOSED OF DIRECTLY, AND WILL NOT BE USED IN WHOLE OR IN PART TO ASSIST IN MAKING OR TO FURNISH ANY INFORMATION FOR THE MAKING OF DRAWINGS OR PRINTS OR OTHER REPRODUCTIONS THEREOF OR FOR THE MAKING OF APPARATUS OR PARTS THEREOF EXCEPT UPON WRITTEN PERMISSION OF CAMBRIDGE INSTRUMENTS INC. FIRST OBTAINED SPECIFIC AS TO EACH CASE. THE ACCEPTANCE OF THIS DRAWING WILL BE CONSTRUED AS AN ACCEPTANCE OF THE FOREGOING AGREEMENT.

(2 of 2)
A1 853572 SHT. 1

USED ON
713909

Grid Ref	I.C. no.	Description		Grid Ref	I.C. no.	Description		Grid Ref	I.C. no.	Description		Grid Ref	I.C. no.	Description	
A1	79	74LS245N	0V-10, +5V-20 ✳	E1	68	74ALS573	0V-10, +5V-20	H1	38	MB8128-10M	0V-12, +5V-24	K1	1	74LS244	0V-10, +5V-20 ✳
–	–	———		E2	66	74ALS573	0V-10, +5V-20	H2	35	74LS245N	0V-10, +5V-20	K2a	2	OPTO 2631	as diagram ✳
B2	78	74LS245N	0V-10, +5V-20	E3	44	74HCT244	0V-10, +5V-20	H3	40	EPROM 855402	0V-12, +5V-24	K2b	16	OPTO 2631	as diagram
B3a	70	LT1013	as diagram	E4	37	74HCT244	0V-10, +5V-20 ✳	H4	34	74LS245N	0V-10, +5V-24 ✳	K3a	4	OPTO 2631	as diagram ✳
B3b	72	AD625	as diagram	E5	36	74HCT244	0V-10, +5V-20	–	–	———		K3b	14	OPTO 2631	as diagram
B4	73	SW202	as diagram	E6	65	DAC1230KN	as diagram ✳	H5b	76	74LS244	0V-10, +5V-20	K4a	6	OPTO 2631	as diagram ✳
–	–	———		E7	60	LF353	as diagram ✳	H6	30	74HCT244	0V-10, +5V-20	K4b	12	OPTO 2631	as diagram
B6	53	DAC7534JN	as diagram ✳	E8	67	DAC1230KN	as diagram ✳	H8	29	74HCT244	0V-10, +5V-20	K5a	8	OPTO 2631	as diagram ✳
B7	54	LF353	as diagram ✳	–	–	———		–	–	———		K5b	10	OPTO 2631	as diagram
B8	55	DAC1230KN	as diagram ✳	F2	46	74HCT244	0V-10, +5V-20 ✳	J1	18	74LS244	0V-10, +5V-20	K6a	28	OPTO 2631	as diagram
–	–	———		F3	45	74HCT244	0V-10, +5V-20	J2a	3	OPTO 2631	as diagram ✳	K6b	26	OPTO 2631	as diagram
–	–	———		F4	47	74LS273N	0V-10, +5V-20 ✳	J2b	17	OPTO 2631	as diagram	K7	24	OPTO 2631	as diagram
C4	62	LT1013C	as diagram	F5	48	74LS273N	0V-10, +5V-20	J3a	5	OPTO 2631	as diagram ✳	K8a	22	OPTO 2631	as diagram
C6	57	DAC1230KN	as diagram ✳	F6	32	74HC123	0V-8, +5V-16	J3b	15	OPTO 2631	as diagram	K8b	19	OPTO 2631	as diagram
C7	56	LF353	as diagram ✳	F8	71	1021 DCN8		J4a	7	OPTO 2631	as diagram ✳	–	–	———	
C8	59	DAC1230KN	as diagram ✳	–	–	———		J4b	13	OPTO 2631	as diagram	L6	77	74LS244	0V-10, +5V-20
–	–	———		–	–	———		J5a	9	OPTO 2631	as diagram ✳	–	–	———	
–	–	———		G1	39	MB8128-10M	0V-12, +5V-24 ✳	J5b	11	OPTO 2631	as diagram	–	–	———	
D2	50	ADC-7550	as diagram	G2	41	PAL 853657	0V-10, +5V-20	J6a	27	OPTO 2631	as diagram	–	–	———	
D4	69	DAC 1230KN	as diagram	G3	74	74HC240	0V-10, +5V-20	J6b	25	OPTO 2631	as diagram	–	–	———	
D6	61	DAC 1230KN	as diagram ✳	G4	43	74HC13	0V-8, +5V-16	J7	23	OPTO 2631	as diagram	–	–	———	
D7	58	LF353	as diagram ✳	G5	64	74HC32	0V-7, +5V-14	J8a	21	OPTO 2631	as diagram	–	–	———	
D8	63	DAC1230KN	as diagram ✳	G6	31	74HC08	0V-7, +5V-14	J8b	20	OPTO 2631	as diagram	–	–	———	
–	–	———		G7	42	74HC138	0V-8, +5V-16	–	–	———		–	–	———	
–	–	———		G8	75	74HCT244	0V-10, +5V-20	–	–	———		–	–	———	
–	–	———		–	–	———		–	–	———		–	–	———	

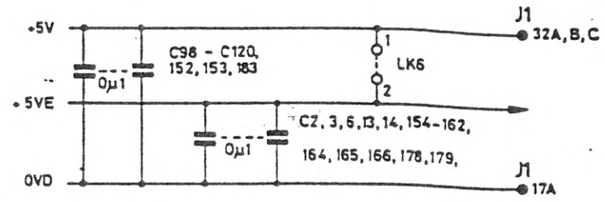

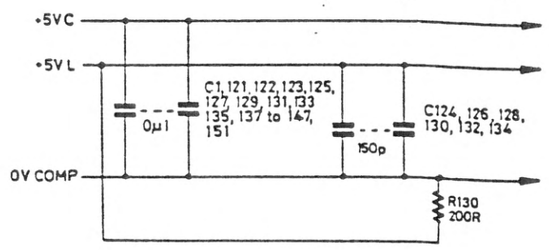

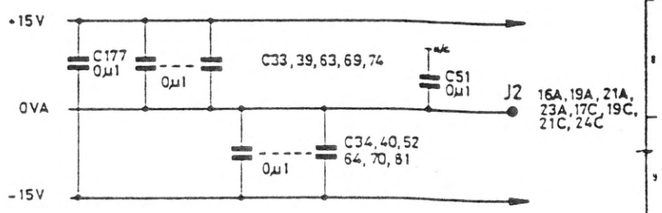

✳ :- COMPONENTS MARKED THUS ARE NOT FITTED ON THIS ASSEMBLY

© CAMBRIDGE INSTRUMENTS LIMITED 1986.
THIS DRAWING IS THE PROPERTY OF THE CAMBRIDGE INSTRUMENT CO. LTD. GROUP OF COMPANIES WHICH INCLUDE CAMBRIDGE INSTRUMENTS LTD. U.K., CAMBRIDGE INSTRUMENTS GMBH WEST GERMANY, CAMBRIDGE INSTRUMENTS SARL, FRANCE, CAMBRIDGE INSTRUMENTS INC U.S.A. THIS DRAWING SHALL NOT BE COPIED OR REPRODUCED IN ANY FORM TO THIRD PERSONS WITHOUT WRITTEN PERMISSION FROM CAMBRIDGE INSTRUMENTS LIMITED.
IN THE U.S.A. THIS DRAWING IS LOANED WITH THE EXPRESSED AGREEMENT THAT THE DRAWING AND INFORMATION THEREIN CONTAINED ARE THE PROPERTY OF CAMBRIDGE INSTRUMENTS INC AND WILL NOT BE REPRODUCED COPIED OR OTHERWISE DISPOSED OF DIRECTLY AND WILL NOT BE USED IN WHOLE OR IN PART TO ASSIST IN MAKING OR TO FURNISH ANY INFORMATION FOR THE MAKING OF DRAWINGS OR PRINTS OR OTHER REPRODUCTIONS THEREOF OR FOR THE MAKING OF APPARATUS OR PARTS THEREOF EXCEPT UPON WRITTEN PERMISSION OF CAMBRIDGE INSTRUMENTS INC FIRST OBTAINED SPECIFIC AS TO EACH CASE. THE ACCEPTANCE OF THIS DRAWING WILL BE CONSTRUED AS AN ACCEPTANCE OF THE FOREGOING AGREEMENT.

LAST COMPONENT REF No
USED
R
C

	DRN	DATE
	APP	DATE
	TRACED	DATE
	CHKD	DATE

UNLESS OTHERWISE STATED ALL RESISTORS ARE ¼WATT ±5% TOLERANCED

TITLE
S360 E.O. INTERFACE P.C.B.
CIRCUIT DIAGRAM

CAMBRIDGE INSTRUMENTS LIMITED

PRODUCT S360 CODE

CIRCUIT DIAGRAM No. A1 853572 Sheet 1

SHT 2 OF 2

36

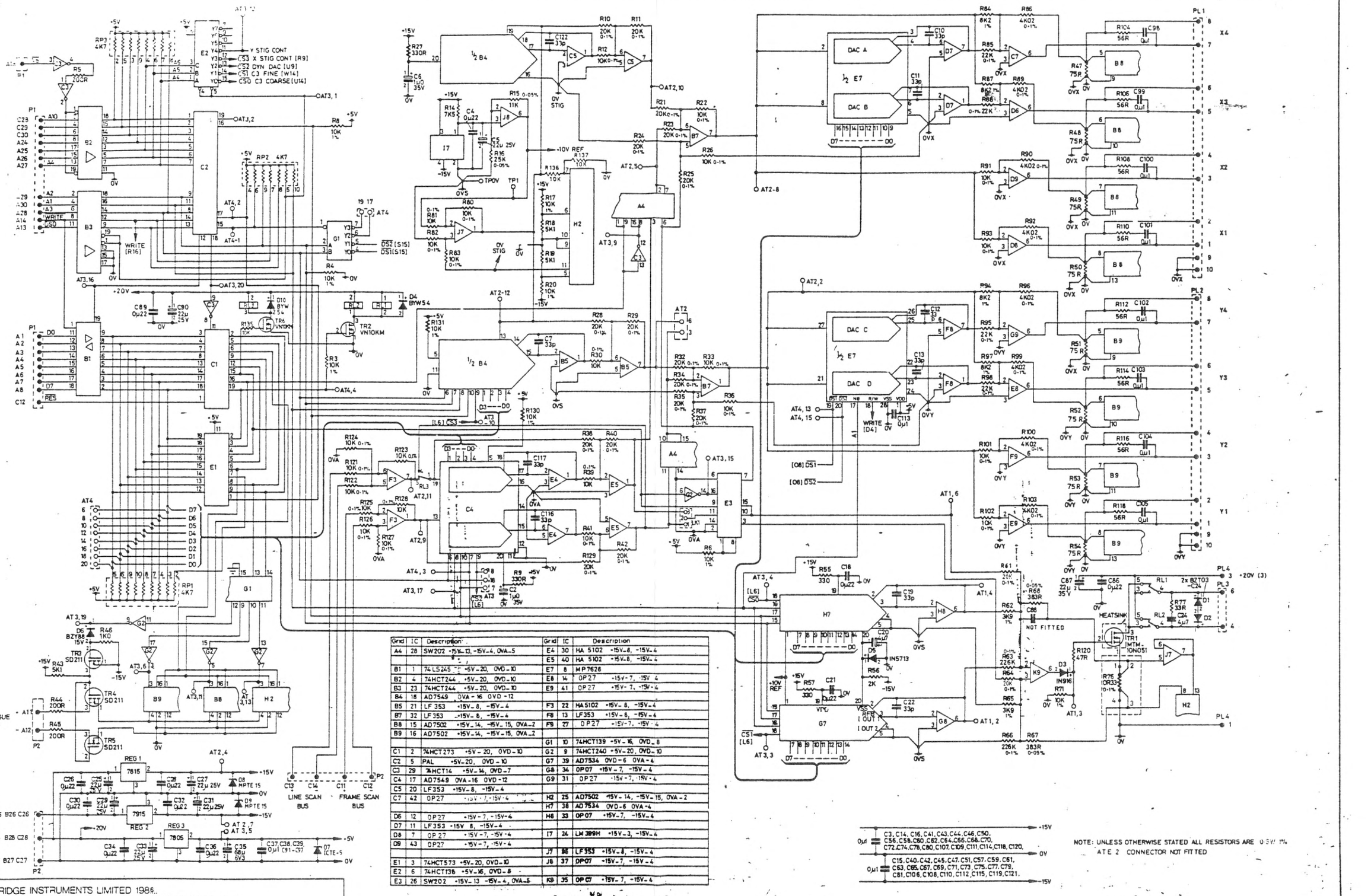

Grid	IC	Description	Grid	IC	Description
A4	28	SW202 +5V–13, –15V–4, OVA–5	E4	30	HA 5102 +15V–8, –15V–4
			E5	40	HA 5102 +15V–8, –15V–4
B1	1	74LS245 +5V–20, OVD–10	E7	8	MP7628
B2	4	74HCT244 +5V–20, OVD–10	E8	14	OP27 +15V–7, –15V–4
B3	23	74HCT244 +5V–20, OVD–10	E9	41	OP27 +15V–7, –15V–4
B4	18	AD7549 OVA–16 OVD–12			
B5	21	LF353 +15V–8, –15V–4	F3	22	HA5102 +15V–8, –15V–4
B7	32	LF353 –15V–8, –15V–4	F8	13	LF353 +15V–8, –15V–4
B8	15	AD7502 +15V–14, –15V–15, OVA–2	F9	27	OP27 +15V–7, –15V–4
B9	16	AD7502 +15V–14, –15V–15, OVA–2			
			G1	10	74HCT139 +5V–16, OVD–8
C1	2	74HCT273 +5V–20, OVD–10	G2	9	74HCT240 +5V–20, OVD–10
C2	5	PAL +5V–20, OVD–10	G7	39	AD7534 OVD–6 OVA–4
C3	29	74HCT14 +5V–14, OVD–7	G8	34	OP07 +15V–7, –15V–4
C4	17	AD7549 OVA–16 OVD–12	G9	31	OP27 +15V–7, –15V–4
C5	20	LF353 +15V–8, –15V–4			
C7	42	OP27 +15V–7, –15V–4	H2	25	AD7502 +15V–14, –15V–15, OVA–2
			H7	38	AD7534 OVD–6 OVA–4
D6	12	OP27 +15V–7, –15V–4	H8	33	OP07 +15V–7, –15V–4
D7	11	LF353 +15V–8, –15V–4			
D8	7	OP27 +15V–7, –15V–4	I7	24	LM399H +15V–3, –15V–4
D9	43	OP27 +15V–7, –15V–4			
			J7	36	LF353 +15V–8, –15V–4
E1	3	74HCT573 +5V–20, OVD–10	J8	37	OP07 +15V–7, –15V–4
E2	6	74HCT138 +5V–16, OVD–8	K9	35	OP07 +15V–7, –15V–4
E3	26	SW202 +15V–13 –15V–4, OVA–5			

C3, C14, C16, C41, C43, C44, C46, C50, C56, C58, C60, C62, C64, C66, C68, C70, C72, C74, C78, C80, C107, C109, C111, C114, C118, C120. 0µ1

C15, C40, C42, C45, C47, C51, C57, C59, C61, C63, C65, C67, C69, C71, C73, C75, C77, C79, C81, C106, C108, C110, C112, C115, C119, C121. 0µ1

CAMBRIDGE INSTRUMENTS LIMITED 1986.
THIS DRAWING IS THE PROPERTY OF THE CAMBRIDGE INSTRUMENT CO. LTD. GROUP OF COMPANIES WHICH INCLUDE CAMBRIDGE INSTRUMENTS LTD., U.K., CAMBRIDGE INSTRUMENTS GMBH, WEST GERMANY, CAMBRIDGE INSTRUMENTS SARL, FRANCE, CAMBRIDGE INSTRUMENTS INC. U.S.A. THIS DRAWING SHALL NOT BE COPIED OR REPRODUCED IN ANY FORM TO THIRD PERSONS WITHOUT WRITTEN PERMISSION FROM CAMBRIDGE INSTRUMENTS LIMITED.
IN THE U.S.A. THIS DRAWING IS LOANED WITH THE EXPRESSED AGREEMENT THAT THE DRAWING AND INFORMATION THEREIN CONTAINED ARE THE PROPERTY OF CAMBRIDGE INSTRUMENTS INC AND WILL NOT BE REPRODUCED, COPIED OR OTHERWISE DISPOSED OF DIRECTLY AND WILL NOT BE USED IN WHOLE OR IN PART TO ASSIST IN MAKING OR TO FURNISH ANY INFORMATION FOR THE MAKING OF DRAWINGS OR PRINTS OR OTHER REPRODUCTIONS THEREOF OR FOR THE MAKING OF APPARATUS OR PARTS THEREOF EXCEPT UPON WRITTEN PERMISSION OF CAMBRIDGE INSTRUMENTS INC. FIRST OBTAINED SPECIFIC AS TO EACH CASE. THE ACCEPTANCE OF THIS DRAWING WILL BE CONSTRUED AS AN ACCEPTANCE OF THE FOREGOING AGREEMENT.

C3 CONTROL PCB CIRCUIT DIAGRAM

CAMBRIDGE INSTRUMENTS LIMITED

PRODUCT S360

CIRCUIT DIAGRAM No A0 853408 SHT 1

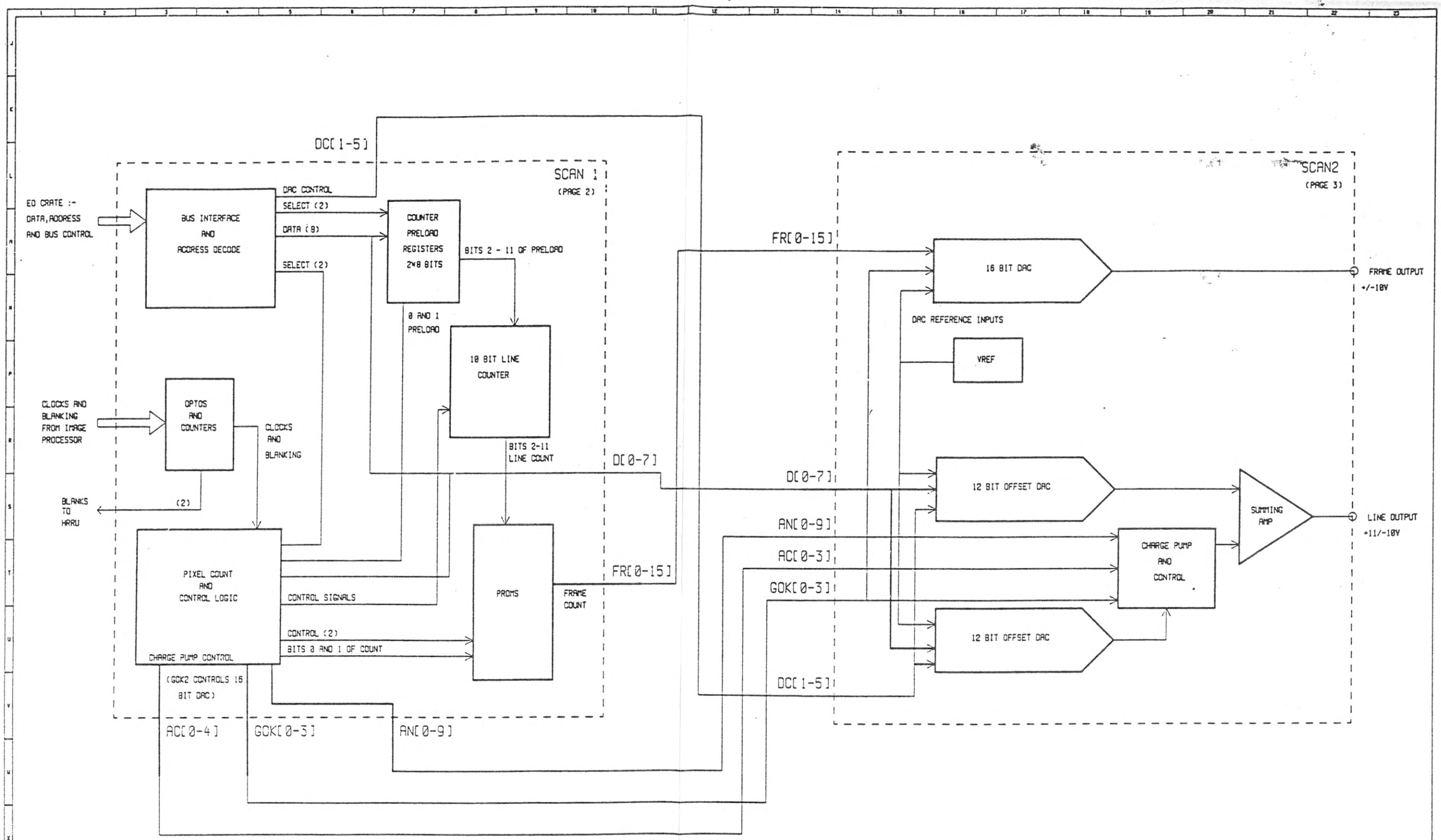

© CAMBRIDGE INSTRUMENTS LIMITED 1987

THIS DRAWING IS THE PROPERTY OF THE CAMBRIDGE INSTRUMENT CO. LTD. WHICH INCLUDES CAMBRIDGE INSTRUMENTS LTD., U.K., CAMBRIDGE INSTRUMENTS GMBH, W.GT. JOHANNA, CAMBRIDGE INSTRUMENTS SARL, FRANCE, AND CAMBRIDGE INSTRUMENTS INC. U.S.A. THIS DRAWING SHALL NOT BE COPIED OR REPRODUCED IN ANY FORM TO THIRD PERSONS WITHOUT WRITTEN PERMISSION FROM CAMBRIDGE INSTRUMENTS LIMITED.
IN THE U.S.A., THIS DRAWING IS LOANED WITH THE EXPRESSED AGREEMENT THAT THE DRAWING AND INFORMATION THEREIN CONTAINED, AND THE PROPERTY OF CAMBRIDGE INSTRUMENTS INC. AND WILL NOT BE REPRODUCED, COPIED, OR OTHERWISE DISPOSED OF DIRECTLY, AND SHALL NOT BE USED IN WHOLE OR IN PART TO ASSIST IN MAKING OR TO FURNISH ANY INFORMATION FOR THE MAKING OF DRAWINGS OR PARTS OR ANYTHING SO MADE REPRESENTATIONS THEREOF TO ANY THE MAKING OF APPARATUS OR PARTS THEREOF EXCEPT UPON WRITTEN PERMISSION OF CAMBRIDGE INSTRUMENTS INC. THEIR DEPARTMENT SPECIFIC AS TO EACH ONE. THE ACCEPTANCE OF THIS DRAWING WILL BE CONSTRUED AS AN ACCEPTANCE OF THE FOREGOING AGREEMENT

WARNING : CAD PRODUCED CIRCUIT DO NOT HAND MODIFY

| | | |

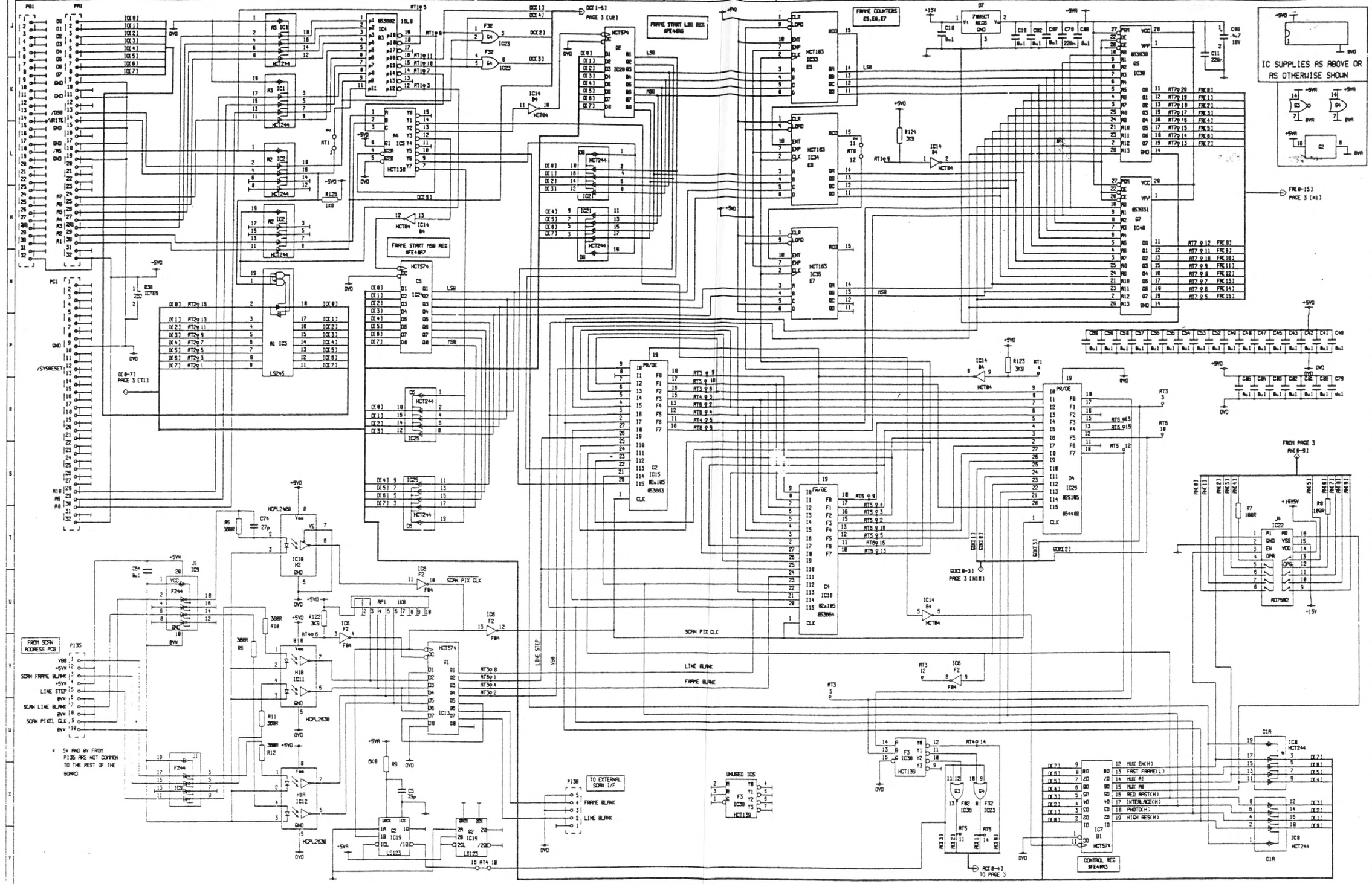

© CAMBRIDGE INSTRUMENTS LIMITED 1987

THIS DRAWING IS THE PROPERTY OF THE CAMBRIDGE INSTRUMENT CO. LTD. WHICH INCLUDES CAMBRIDGE INSTRUMENTS LTD., U.K., CAMBRIDGE INSTRUMENTS GMBH, WEST GERMANY, CAMBRIDGE INSTRUMENTS SARL, FRANCE, AND CAMBRIDGE INSTRUMENTS INC. U.S.A. THIS DRAWING SHALL NOT BE COPIED OR REPRODUCED IN ANY FORM TO THIRD PERSONS WITHOUT WRITTEN PERMISSION FROM CAMBRIDGE INSTRUMENTS LIMITED.
IN THE U.S.A., THIS DRAWING IS LOANED WITH THE EXPRESSED AGREEMENT THAT THE DRAWING AND INFORMATION THEREIN CONTAINED, ARE THE PROPERTY OF CAMBRIDGE INSTRUMENTS INC. AND WILL NOT BE REPRODUCED, COPIED, OR OTHERWISE DISPOSED OF DIRECTLY, AND WILL NOT BE USED IN WHOLE OR IN PART TO MANUFACTURE OR PROCESS OR TO FURNISH ANY INFORMATION FOR THE MAKING OF DRAWINGS OR PRINTS OR OTHER REPRODUCTIONS THEREOF OR FOR THE MAKING OF APPARATUS OR PARTS THEREOF EXCEPT UPON WRITTEN PERMISSION OF CAMBRIDGE INSTRUMENTS INC. FIRST OBTAINED SPECIFIC AS TO EACH CASE. THE ACCEPTANCE OF THIS DRAWING WILL BE CONSTRUED AS AN ACCEPTANCE OF THE FOREGOING AGREEMENT

WARNING : CAD PRODUCED CIRCUIT DO NOT HAND MODIFY

JMG	GP	GP	GP	TWH	RMW/TH	GP/TWH	PF	TWH	C.L.R	C.L.R	C.L.R	C.L.R	S.BRAGG	DRN
RMW	RMW	RMW	RMW	GP	RMW	GP	RMW	GP	GP	GP	GP	GP	J.ROSE	CHKD
MAM	MAM	MAM	MAM	MAM	MAM	MAM	MAM	MAM	MAM	MAM	MAM	MAM	M.A.M	APP
SKH	SKH	SKH	SKH	SKH	SKH	SKH	SKH	SKH	SKH	SKH	SKH	SKH	S.K.H	PCR
19-10-88	30-3-88	21-3-88	8-2-88	10-01-88	14/10/87	10-9-87	25/8/87	4/8/87	27/7/87	27/7/87	27/7/87	27/7/87	22/1/87	DATE
24585	24875	24728	24817	24585	24197	24852	24838	23886	23813	23885	23378	23327	INITIAL	MOD NO
13A	13	12	11	10	9	8	7	6	5	4	3	2	1	ISSUE

TITLE
S360.SCAN.GENERATOR
CIRCUIT.DIAGRAM

		DATE
DRN	S.BRAGG	1/11/86
CHKD	J.ROSE	22/1/87
APP	M.A.M	22/1/87
PCR	S.K.H	22/1/87
PED	M.ROLFE	22/1/87

CAMBRIDGE INSTRUMENTS LIMITED

CIRCUIT DIAGRAM No. A0 - 853392

SHEET 1 PAGE:2 OF:3

40

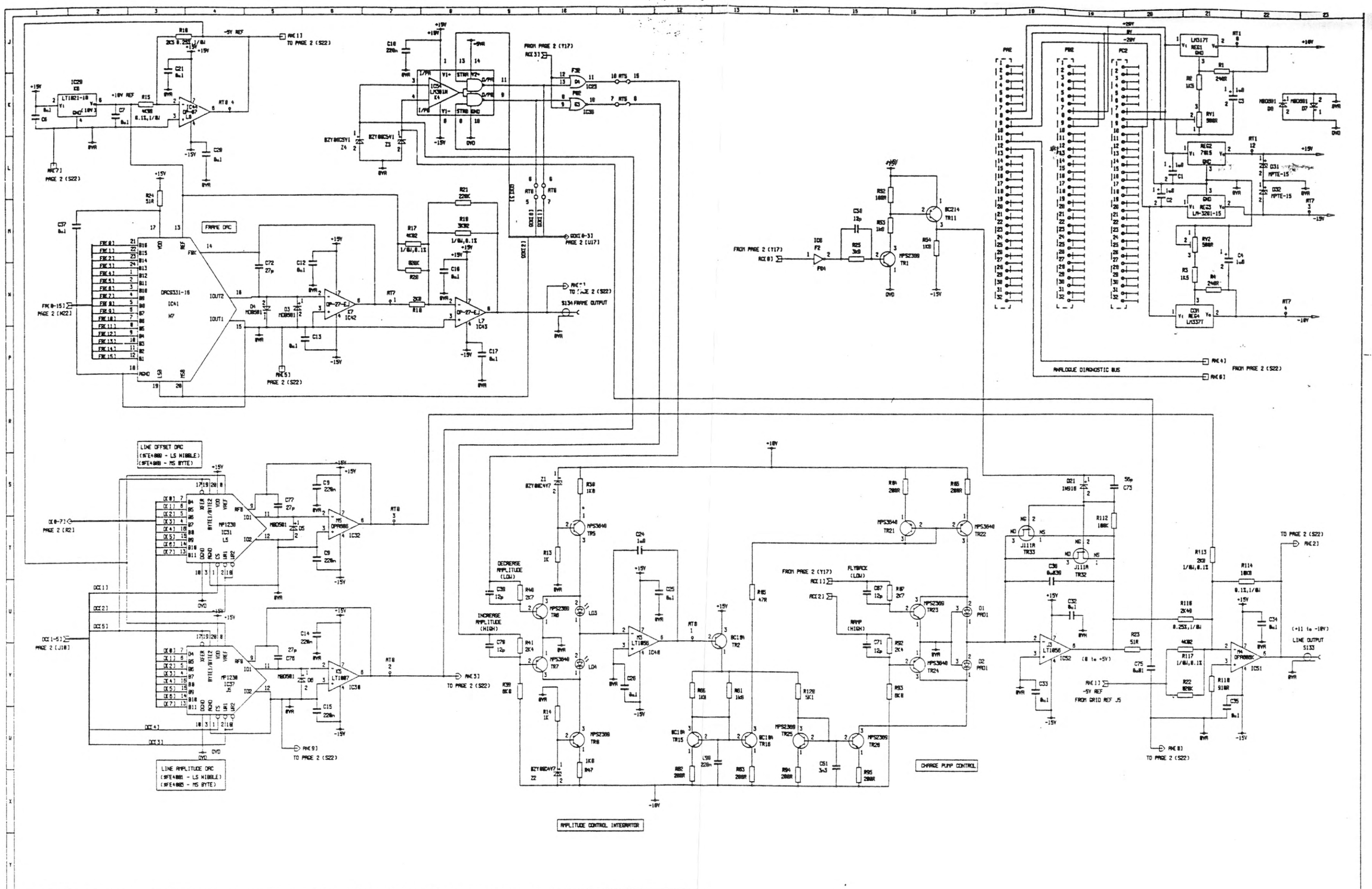

© CAMBRIDGE INSTRUMENTS LIMITED 1987

THIS DRAWING IS THE PROPERTY OF THE CAMBRIDGE INSTRUMENT CO. LTD. UNION INCLUDES CAMBRIDGE INSTRUMENTS LTD., U.K., CAMBRIDGE INSTRUMENTS GMBH, WEST GERMANY, CAMBRIDGE INSTRUMENTS SAR., FRANCE, AND CAMBRIDGE INSTRUMENTS INC. U.S.A. THIS DRAWING SHALL NOT BE COPIED OR REPRODUCED IN ANY FORM TO THIRD PERSONS WITHOUT WRITTEN PERMISSION FROM CAMBRIDGE INSTRUMENTS LIMITED.
IN THE U.S.A., THIS DRAWING IS LOANED WITH THE EXPRESSED AGREEMENT THAT THE DRAWING AND INFORMATION THEREIN CONTAINED, ARE THE PROPERTY OF CAMBRIDGE INSTRUMENTS INC. AND WILL NOT BE REPRODUCED, COPIED, OR OTHERWISE DISPOSED OF DIRECTLY, AND WILL NOT BE USED IN WHOLE OR IN PART TO ASSIST IN MAKING OR TO FURNISH ANY INFORMATION FOR THE MAKING OF DRAWINGS OR PRINTS OR OTHER REPRODUCTIONS THEREOF OR FOR THE MAKING OF APPARATUS OR PARTS THEREOF EXCEPT UPON WRITTEN PERMISSION OF CAMBRIDGE INSTRUMENTS INC. FIRST OBTAINED SPECIFIC AS TO EACH CASE. THE ACCEPTANCE OF THIS DRAWING WILL BE CONSTRUED AS AN ACCEPTANCE OF THE FOREGOING AGREEMENT

WARNING : CAD PRODUCED CIRCUIT DO NOT HAND MODIFY

JMS	GP	GP	GP	TWH	RMW/TH	GP/TWH	PF	TWH	C.L.R	C.L.R	C.L.R	C.L.R	S.BRAGG	DRN
[illegible]	RMW	RMW	RMW	G.P	RMW	GP	RMW	GP	GP	GP	GP	GP	J.ROSE	CHKD
[illegible]	MAM	MAM	MAM	MAM	MAM	MAM	MAM	MAM	MAM	MAM	MAM	MAM	M.A.M	APP
[illegible]	SKH	SKH	SKH	SKH	SKH	SKH	SKH	SKH	SKH	SKH	SKH	SKH	S.K.H	PCR
19-10-88	30-3-88	21-3-88	8-2-88	10-01-88	14/10/87	10-9-87	25/8/87	4/8/87	27/7/87	27/7/87	27/7/87	27/7/87	22/1/87	DATE
24585	24875	24728	24817	24585	24197	24882	24838	23808	23813	23825	23370	23527	INITIAL	MOD NO
13A	13	12	11	10	9	8	7	6	5	4	3	2	1	ISSUE

TITLE
S360-SCAN-GENERATOR
CIRCUIT-DIAGRAM

		DATE
DRN	S.BRAGG	1/11/88
CHKD	J.ROSE	22/1/87
APP	M.A.M	22/1/87
PCR	S.K.H	22/1/87
PCD	M.ROLFE	22/1/87

CAMBRIDGE INSTRUMENTS LIMITED

CIRCUIT DIAGRAM No. A0 - 853392

SHEET 1
PAGE:3
OF:3

DRAWING No.
A2 853378 Sht 1. 2 of 2

USED ON
713909

PROJECTION

AMEND/MOD.	INITIALS	DATE	ISSUE
INITIAL	GL	17.7.86	1
23434	R&R	11.9.87	2
23530	TWH	3-6-87	3
23708	TWH	29-6-87	4
23789	TWH	10-7-87	5
24077	R&R	8.9.87.	5A
24395	LJ	19.11.87	6
24260	TWH	1-12-87	7
24868	TWH	11-4-88	8
25410	DWH	20-2-89	9
26215	KP	10-5-89	10
26424	PRC	1-8-89	11

A1 IC18	74HCT245 0VD-10 +5V-20	B1 IC53	74HC273 0VD-10 +5V-20	C1 IC17	74HC132 0VD-7 +5V-14	D1 IC50	74HC32 0VD-7 +5V-14	E1 IC59	74HC123 0VD-8 +5V-16	F1		G1 IC6	HA3-2525 +15V-7 -15V-4	H1		J1 IC1	HA3-2525 +15V-7 -15V-4
A2 IC15	74HCT244 0VD-10 +5V-20	B2 IC57	74HC573 0VD-10 +5V-20	C2 IC58	74HC273 0VD-10 +5V-20	D2 IC14	74HC02 0VD-7 +5V-14	E2 IC47	HCPL-2630 0VD-5 +5V-8	F2 IC56	LF353 +15V-8 -15V-4	G2 IC5	SW202-GP +15V-13 -15V-4 0VA-5	H2a IC4	SW202-GP +15V-13 -15V-4 0VA-5	J2 IC2	LF351 +15V-7 -15V-4
A3 IC16	74HCT244 0VD-10 +5V-20	B3 IC19	PAL 0VD-10 +5V-20	C3 IC54	74HC32 0VD-7 +5V-14	D3 IC55	74HC273 0VD-10 +5V-20	E3		F3 IC13	LF353 +15V-8 -15V-4	G3 IC12	SW202-GP +15V-13 -15V-4 0VA-5	H2b IC3	LF353 +15V-8 -15V-4	J3a IC9	HA3-2525 +15V-7 -15V-4
A4a IC60	74HC00 0VD-7 +5V-14			C4		D4 IC52	74HC04 0VD-7 +5V-14	E4 IC39	LM308A +15V-7 -15V-4	F4 IC37	LF353 +15V-8 -15V-4	G4 IC46	LF351 +15V-7 -15V-4	H3a IC8	HA3-2525 +15V-7 -15V-4	J3b IC10	LF353 +15V-8 -15V-4
A4b IC61	5082-4360 0VD-5 +5V-8			C5 IC33	SW202-GP +15V-13 -15V-4 0VA-5	D5 IC40	LF351 +15V-7 -15V-4	E5 IC38	MP1230 +15V-20 0VA-3 0VD-10	F5 IC36	MP1230 +15V-20 0VA-3 0VD-10	G5 IC45	MP1230 +15V-20 0VA-3 0VD-10	H3b IC7	LF351 +15V-7 -15V-4	J4 IC11	LT1013CNB +15V-8 -15V-4
A4c IC20	74HC138 0VD-8 +5V-16			C6 IC34	AD7502 +15V-14 -15V-15 0VA-2	D6 IC29	AD7534 +15V-19 0VD-6	E6a IC32	LM308A +15V-7 -15V-4	F6 IC22	LT1021-DCN8 0VA-4	G6 IC24	AD7534 +15V-19 0VD-6 0VA-4,5	H5a IC44	LF353 +15V-8 -15V-4	J5a IC41	LF351 +15V-7 -15V-4
						D7 IC30	LF351 +15V-7 -15V-4	E6b IC28	LF353 +15V-8 -15V-4			G7 IC25	LF351 +15V-7 -15V-4	H6 IC27	LM308A +15V-7 -15V-4	J5b IC42	LF351 +15V-7 -15V-4
								E7 IC31	LM308A +15V-7 -15V-4					H7 IC26	LM308A +15V-7 -15V-4		
														H5b IC43	HI-201HS +15V-13 -15V-4 0VA-5		

© CAMBRIDGE INSTRUMENTS LTD. 1986

0 INCHES 1
0 10 20 30
mm

~~THIS DRAWING CONFORMS TO B.S.308.1972~~
~~REMOVE BURRS FROM SHARP EDGES AND CORNERS~~
~~USING.....RAD. MAX.~~

CONFIDENTIAL
This document is the property of Cambridge Instruments Ltd
Its contents must not be copied or communicated to a third party without written permission.

MATERIAL:
PROTECTIVE FINISH
TOLERANCES UNLESS OTHERWISE STATED
DECIMAL ±
FRACTIONS & WHOLE NUMBER ±
ANGULAR ±
DIMENSIONS IN UNLESS OTHERWISE STATED
SURFACE ROUGHNESS: UNLESS OTHERWISE STATED

DRAWN: David DATE 17.3.86
DESIGN ENG.CKD. DATE GP 18-8-86
PROD. CHKD: DATE 18-8-86
APPROVED: DATE 1-9-86
SCALE:

CAMBRIDGE INSTRUMENTS LTD.

TITLE S360 EXTERNAL SCAN INTERFACE PCB CIRCUIT DIAGRAM

DRAWING No. A2 853378 Sht 1
Sheet 2 of 2

ISSUE

SIZE A2

I.C.	Type	I.C.	Type	I.C.	Type	I.C.	Type
A1	74HCT244	D3	LT1021 DCN8-10	F3	LT1056 CN8	H4	LF351N
B2	PAL16L8A-4 853501	D4	LT1056 CN8	F4	LT1056 CN8	H5	LF351N
B3	LM339	D5	DAC AD7534 JN	F5	DAC AD7534 JN	J4	LF351N
C1	74HCT244	E2	74HCT138	G2	CA3096E	J5	LT1056 CN8
C2	74HCT574	E4a	LT1056 CN8	G4	LF351N	K4	LF351N
D1	74LS245	E4b	LT1056 CN8	G5	DAC AD7534 JN	K5	LF351N
D2	74HCT573	E5	DAC AD7534 JN				
		F2	LM339				

* NOTE. C59 NOT FITTED

CAMBRIDGE INSTRUMENTS LIMITED 1986.
THIS DRAWING IS THE PROPERTY OF THE CAMBRIDGE INSTRUMENT CO. LTD. GROUP OF COMPANIES WHICH INCLUDE CAMBRIDGE INSTRUMENTS LTD. U.K. CAMBRIDGE INSTRUMENTS GMBH. WEST GERMANY. CAMBRIDGE INSTRUMENTS SARL. FRANCE. CAMBRIDGE INSTRUMENTS INC. U.S.A. THIS DRAWING SHALL NOT BE COPIED OR REPRODUCED IN ANY FORM TO THIRD PERSONS WITHOUT WRITTEN PERMISSION FROM CAMBRIDGE INSTRUMENTS LIMITED
IN THE U.S.A. THIS DRAWING IS LOANED WITH THE EXPRESSED AGREEMENT THAT THE DRAWING AND INFORMATION THEREIN CONTAINED ARE THE PROPERTY OF CAMBRIDGE INSTRUMENTS INC. AND WILL NOT BE REPRODUCED, COPIED OR OTHERWISE DISPOSED OF DIRECTLY, AND WILL NOT BE USED IN WHOLE OR IN PART TO ASSIST IN MAKING OR TO FURNISH ANY INFORMATION FOR THE MAKING OF DRAWINGS OR PRINTS OR OTHER REPRODUCTIONS THEREOF OR FOR THE MAKING OF APPARATUS OR PARTS THEREOF EXCEPT UPON WRITTEN PERMISSION OF CAMBRIDGE INSTRUMENTS INC. FIRST OBTAINED SPECIFIC AS TO EACH CASE. THE ACCEPTANCE OF THIS DRAWING WILL BE CONSTRUED AS AN ACCEPTANCE OF THE FOREGOING AGREEMENT.

SCAN PROCESSOR
CIRCUIT DIAGRAM

CAMBRIDGE INSTRUMENTS LIMITED

A0 853382
Sheet 1

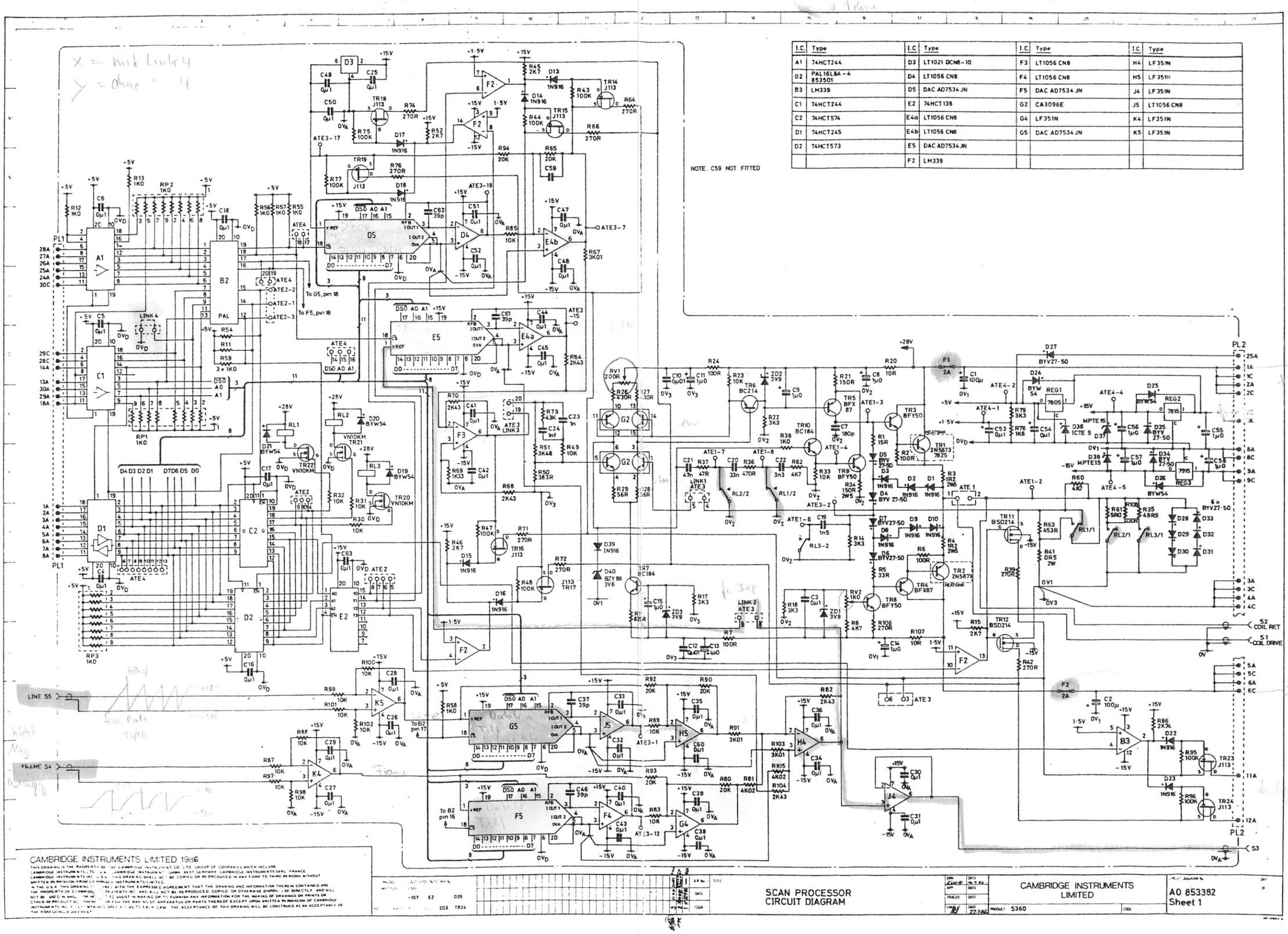

I.C.	Type	I.C.	Type	I.C.	Type	I.C.	Type
A1	74HCT244	D3	LT1021 DCN8-10	F3	LT1056 CN8	H4	LF351N
B2	PAL16L8A-4 853501	D4	LT1056 CN8	F4	LT1056 CN8	H5	LF351N
B3	LM339	D5	DAC AD7534 JN	F5	DAC AD7534 JN	J4	LF351N
C1	74HCT244	E2	74HCT138	G2	CA3096E	J5	LT1056 CN8
C2	74HCT574	E4a	LT1056 CN8	G4	LF351N	K4	LF351N
D1	74HCT245	E4b	LT1056 CN8	G5	DAC AD7534 JN	K5	LF351N
D2	74HCT573	E5	DAC AD7534 JN				
		F2	LM339				

CAMBRIDGE INSTRUMENTS LIMITED 1986

THIS DRAWING IS THE PROPERTY OF THE CAMBRIDGE INSTRUMENTS CO. LTD. GROUP OF COMPANIES WHICH INCLUDE CAMBRIDGE INSTRUMENTS LTD. U.K. CAMBRIDGE INSTRUMENTS GMBH WEST GERMANY CAMBRIDGE INSTRUMENTS SARL FRANCE CAMBRIDGE INSTRUMENTS INC. U.S.A. THIS DRAWING SHALL NOT BE COPIED OR REPRODUCED IN ANY FORM TO THIRD PERSONS WITHOUT WRITTEN PERMISSION FROM CAMBRIDGE INSTRUMENTS LIMITED. IN THE U.S.A. THIS DRAWING IS LOANED WITH THE EXPRESSED AGREEMENT THAT THE DRAWING AND INFORMATION THEREIN CONTAINED ARE THE PROPERTY OF CAMBRIDGE INSTRUMENTS INC. AND WILL NOT BE REPRODUCED, COPIED OR OTHERWISE DISPOSED OF DIRECTLY AND WILL NOT BE USED IN WHOLE OR IN PART TO ASSIST IN MAKING OR TO FURNISH ANY INFORMATION FOR THE MAKING OF DRAWINGS OR PRINTS OR OTHER REPRODUCTIONS THEREOF FOR THE MAKING OF APPARATUS OR PARTS THEREOF EXCEPT UPON WRITTEN PERMISSION OF CAMBRIDGE INSTRUMENTS INC. IT IS ESTIMATED SPECIFICALLY AS TO EACH CASE. THE ACCEPTANCE OF THIS DRAWING WILL BE CONSTRUED AS AN ACCEPTANCE OF THE FOREGOING AGREEMENT.

SCAN PROCESSOR
CIRCUIT DIAGRAM

CAMBRIDGE INSTRUMENTS LIMITED

PRODUCT: S360

A0 853382
Sheet 1

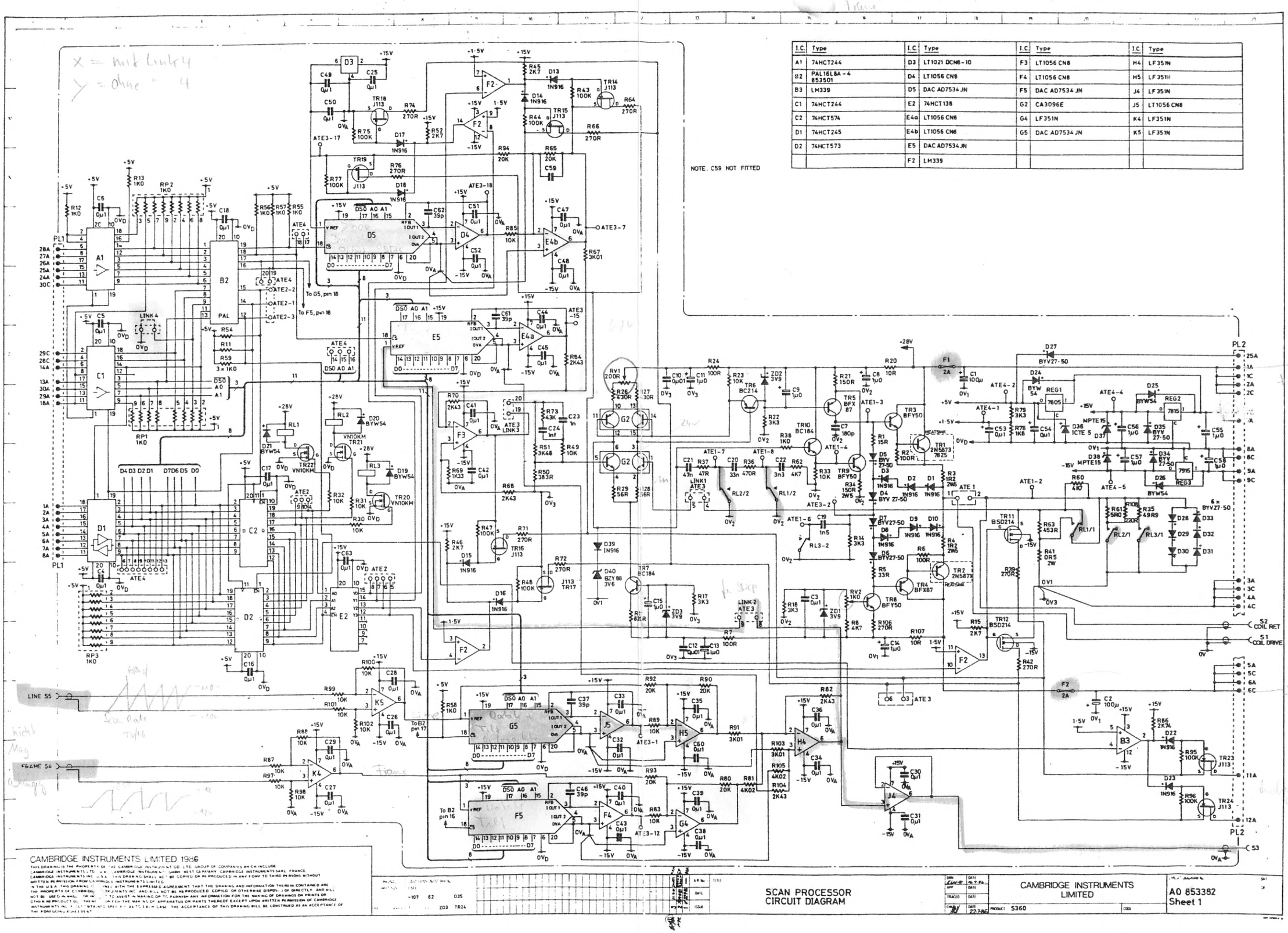

I.C.	Type	I.C.	Type	I.C.	Type	I.C.	Type
A1	74HCT244	D3	LT1021 DCN8-10	F3	LT1056 CN8	H4	LF351N
B2	PAL16L8A-4 853501	D4	LT1056 CN8	F4	LT1056 CN8	H5	LF351N
B3	LM339	D5	DAC AD7534 JN	F5	DAC AD7534 JN	J4	LF351N
C1	74HCT244	E2	74HCT138	G2	CA3096E	J5	LT1056 CN8
C2	74HCT574	E4a	LT1056 CN8	G4	LF351N	K4	LF351N
D1	74HCT245	E4b	LT1056 CN8	G5	DAC AD7534 JN	K5	LF351N
D2	74HCT573	E5	DAC AD7534 JN				
		F2	LM339				

CAMBRIDGE INSTRUMENTS LIMITED 1986

THIS DRAWING IS THE PROPERTY OF THE CAMBRIDGE INSTRUMENTS CO. LTD. GROUP OF COMPANIES WHICH INCLUDE CAMBRIDGE INSTRUMENTS LTD. U.K., CAMBRIDGE INSTRUMENTS GMBH, WEST GERMANY, CAMBRIDGE INSTRUMENTS SARL, FRANCE, CAMBRIDGE INSTRUMENTS INC. U.S.A. THIS DRAWING SHALL NOT BE COPIED OR REPRODUCED IN ANY FORM TO THIRD PERSONS WITHOUT WRITTEN PERMISSION FROM CAMBRIDGE INSTRUMENTS LIMITED. IN THE U.S.A. THIS DRAWING IS LOANED WITH THE EXPRESSED AGREEMENT THAT THE DRAWING AND INFORMATION THEREIN CONTAINED ARE THE PROPERTY OF CAMBRIDGE INSTRUMENTS INC. AND WILL NOT BE REPRODUCED, COPIED OR OTHERWISE DISPOSED OF DIRECTLY AND WILL NOT BE USED IN WHOLE OR IN PART TO ASSIST IN MAKING OR TO FURNISH ANY INFORMATION FOR THE MAKING OF DRAWINGS OR PRINTS OR OTHER REPRODUCTIONS THEREOF FOR THE MAKING OF APPARATUS OR PARTS THEREOF EXCEPT UPON WRITTEN PERMISSION OF CAMBRIDGE INSTRUMENTS INC. IF ITS CONTAINED SPECIFICATIONS TO EACH CASE THE ACCEPTANCE OF THIS DRAWING WILL BE CONSTRUED AS AN ACCEPTANCE OF THE FOREGOING AGREEMENT.

SCAN PROCESSOR
CIRCUIT DIAGRAM

CAMBRIDGE INSTRUMENTS LIMITED

PRODUCT: S360

A0 853382
Sheet 1

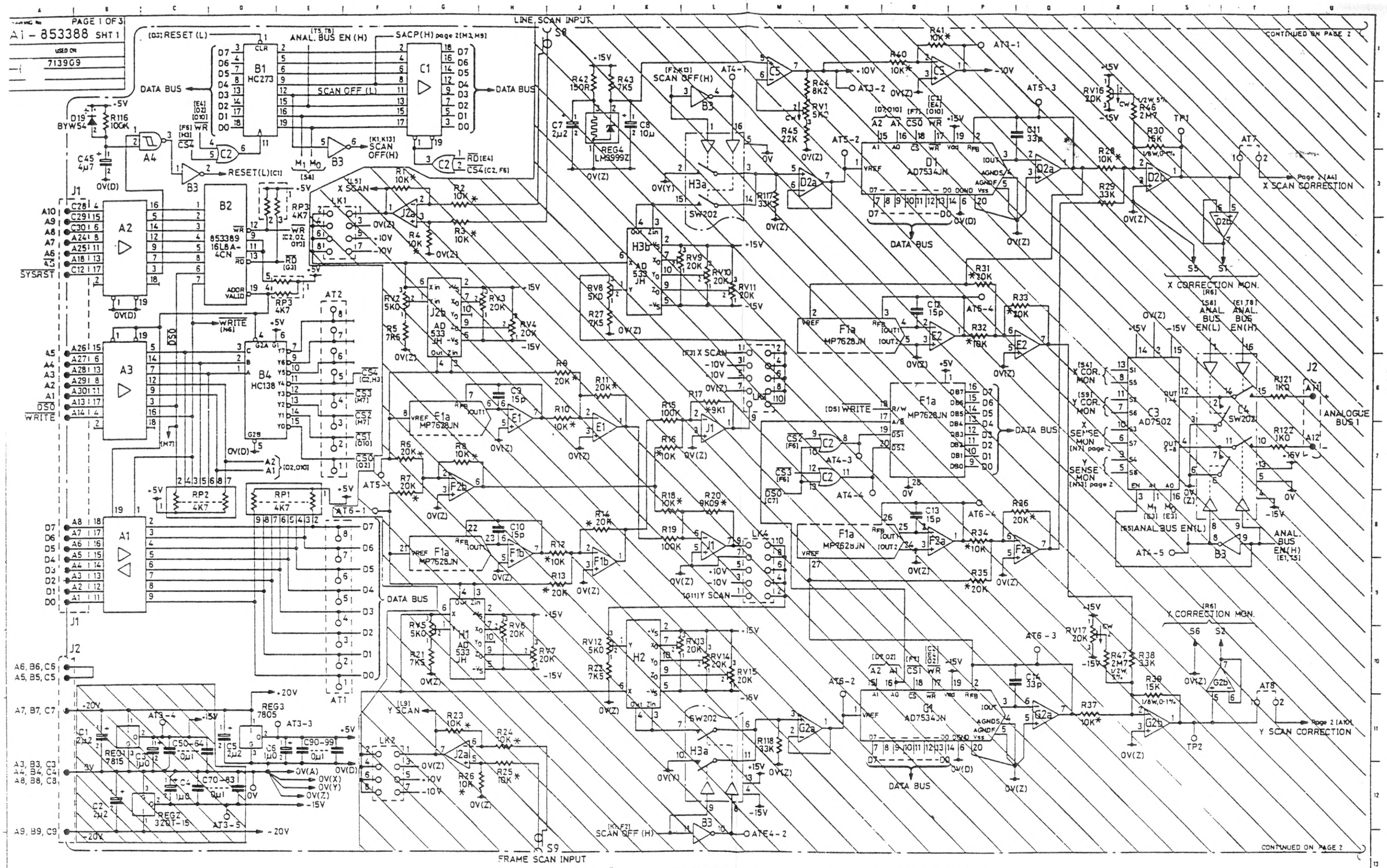

COMPONENTS IN SHADED AREAS NOT FITTED, SHOWN FOR REF ONLY.

© CAMBRIDGE INSTRUMENTS LIMITED 1987.
THIS DRAWING IS THE PROPERTY OF THE CAMBRIDGE INSTRUMENT CO. LTD. GROUP OF COMPANIES WHICH INCLUDE CAMBRIDGE INSTRUMENTS LTD., U.K., CAMBRIDGE INSTRUMENTS GMBH, WEST GERMANY, CAMBRIDGE INSTRUMENTS SARL, FRANCE, CAMBRIDGE INSTRUMENTS INC. U.S.A. THIS DRAWING SHALL NOT BE COPIED OR REPRODUCED IN ANY FORM TO THIRD PERSONS WITHOUT PERMISSION FROM CAMBRIDGE INSTRUMENTS LIMITED.
U.S.A. THIS DRAWING IS LOANED WITH THE EXPRESSED AGREEMENT THAT THE DRAWING AND INFORMATION THEREIN CONTAINED ARE PROPERTY OF CAMBRIDGE INSTRUMENTS INC. AND WILL NOT BE REPRODUCED, COPIED, OR OTHERWISE DISPOSED OF DIRECTLY, AND WILL NOT BE USED IN WHOLE OR IN PART TO ASSIST IN MAKING OR TO FURNISH ANY INFORMATION FOR THE MAKING OF DRAWINGS OR PRINTS OR OTHER REPRODUCTIONS THEREOF OR FOR THE MAKING OF APPARATUS OR PARTS THEREOF EXCEPT UPON WRITTEN PERMISSION OF CAMBRIDGE INSTRUMENTS INC. FIRST OBTAINED SPECIFIC AS TO EACH CASE. THE ACCEPTANCE OF THIS DRAWING WILL BE CONSTRUED AS AN ACCEPTANCE OF THE FOREGOING AGREEMENT.

LAST COMPONENT REF No
USED
R 122 C99 L4
T I/C D23
TR22 REG 4

C/N No
DATE
ISSUE

UNLESS OTHERWISE STATED ALL RESISTORS ARE 0·6WATT, 1% TOLERANCED EXCEPT THOSE MARKED *, WHICH ARE 1/8WATT 0·25%

TITLE
S.A.C.P. CIRCUIT DIAGRAM

DRN Cook DATE Aug. '87
APP DATE
TRACED DATE
CHKD DATE 27-8-87

CAMBRIDGE INSTRUMENTS LIMITED

PRODUCT S360
CODE

CIRCUIT DIAGRAM No
A1 - 853388
SHEET 1 PAGE 1 OF 3

45

PAGE 2 OF 3

A1-853388 SHT 1

USED ON

713909

CONTINUED FROM PAGE 1

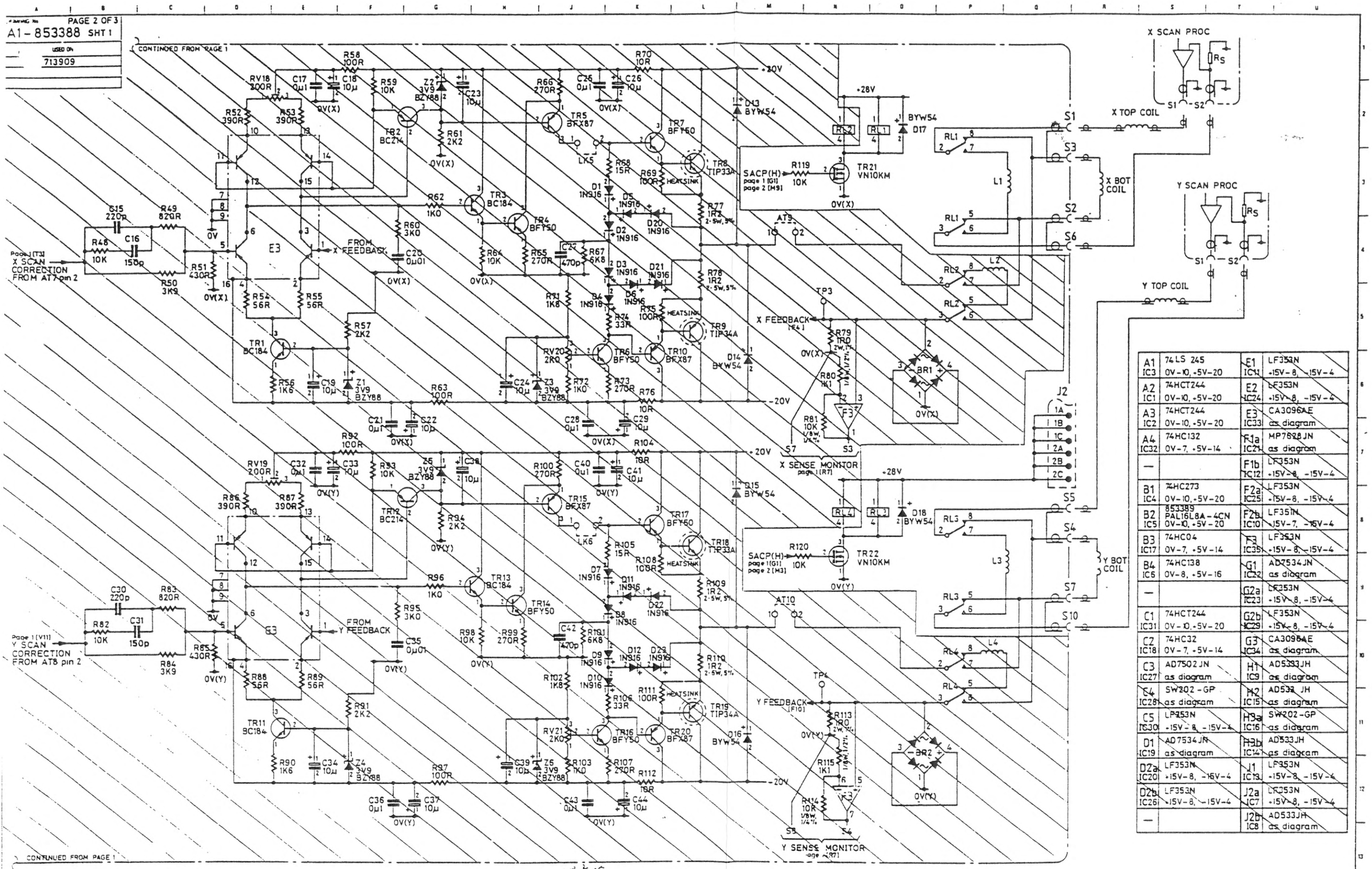

A1 IC3	74LS 245 0V-10, +5V-20	E1 IC11	LF353N +15V-8, -15V-4
A2 IC1	74HCT244 0V-10, +5V-20	E2 IC24	LF353N +15V-8, -15V-4
A3 IC2	74HCT244 0V-10, +5V-20	E3 IC33	CA3096AE as diagram
A4 IC32	74HC132 0V-7, +5V-14	F1a IC21	MP7628JN as diagram
—		F1b IC12	LF353N +15V-8, -15V-4
B1 IC4	74HC273 0V-10, +5V-20	F2a IC25	LF353N +15V-8, -15V-4
B2 IC5	853389 PAL16L8A-4CN 0V-10, +5V-20	F2b IC10	LF351N +15V-7, -15V-4
B3 IC17	74HC04 0V-7, +5V-14	F3 IC35	LF353N +15V-8, -15V-4
B4 IC6	74HC138 0V-8, +5V-16	G1 IC22	AD7534JN as diagram
—		G2a IC23	LF353N +15V-8, -15V-4
C1 IC31	74HCT244 0V-10, +5V-20	G2b IC29	LF353N +15V-8, -15V-4
C2 IC18	74HC32 0V-7, +5V-14	G3 IC34	CA3096AE as diagram
C3 IC27	AD7502JN as diagram	H1 IC9	AD5333JH as diagram
C4 IC28	SW202-GP as diagram	H2 IC15	AD5333JH as diagram
C5 IC30	LF353N +15V-8, -15V-4	H3a IC16	SW202-GP as diagram
D1 IC19	AD7534JN as diagram	H3b IC14	AD5333JH as diagram
D2a IC20	LF353N +15V-8, -16V-4	J1 IC13	LF353N +15V-8, -15V-4
D2b IC26	LF353N +15V-8, -15V-4	J2a IC7	LF353N +15V-8, -15V-4
—		J2b IC8	AD533JH as diagram

© CAMBRIDGE INSTRUMENTS LIMITED 1987..
DRAWING IS THE PROPERTY OF THE CAMBRIDGE INSTRUMENT CO. LTD. GROUP OF COMPANIES WHICH INCLUDE CAMBRIDGE INSTRUMENTS LTD., U.K., CAMBRIDGE INSTRUMENTS GMBH, WEST GERMANY, CAMBRIDGE INSTRUMENTS SARL, FRANCE, CAMBRIDGE INSTRUMENTS INC, U.S.A. THIS DRAWING SHALL NOT BE COPIED OR REPRODUCED IN ANY FORM TO THIRD PERSONS WITHOUT PERMISSION FROM CAMBRIDGE INSTRUMENTS LIMITED.
IN THE U.S.A. THIS DRAWING IS LOANED WITH THE EXPRESSED AGREEMENT THAT THE DRAWING AND INFORMATION THEREIN CONTAINED ARE THE PROPERTY OF CAMBRIDGE INSTRUMENTS INC. AND WILL NOT BE REPRODUCED, COPIED, OR OTHERWISE DISPOSED OF DIRECTLY, AND WILL NOT BE USED IN WHOLE OR IN PART TO ASSIST IN MAKING OR TO FURNISH ANY INFORMATION FOR THE MAKING OF DRAWINGS OR PRINTS OR OTHER REPRODUCTIONS THEREOF OR FOR THE MAKING OF APPARATUS OR PARTS THEREOF EXCEPT UPON WRITTEN PERMISSION OF CAMBRIDGE INSTRUMENTS INC. FIRST OBTAINED SPECIFIC AS TO EACH CASE. THE ACCEPTANCE OF THIS DRAWING WILL BE CONSTRUED AS AN ACCEPTANCE OF THE FOREGOING AGREEMENT.

LAST COMPONENT REF No USED as page 1

R C L

T V/C

C/N No

DATE

ISSUE

COMPONENTS IN SHADED AREAS NOT FITTED, SHOWN FOR REF ONLY.

UNLESS OTHERWISE STATED ALL RESISTORS ARE 0·6 WATT, 1% TOLERANCED

TITLE

S.A.C.P. CIRCUIT DIAGRAM

DRN	DATE Aug.87	CAMBRIDGE INSTRUMENTS LIMITED	CIRCUIT DIAGRAM No. A1-853388
APP	DATE		SHEET 1 PAGE 2 OF 3
TRACED	DATE		
CHKD	DATE 27-8-87	PRODUCT S360	CODE

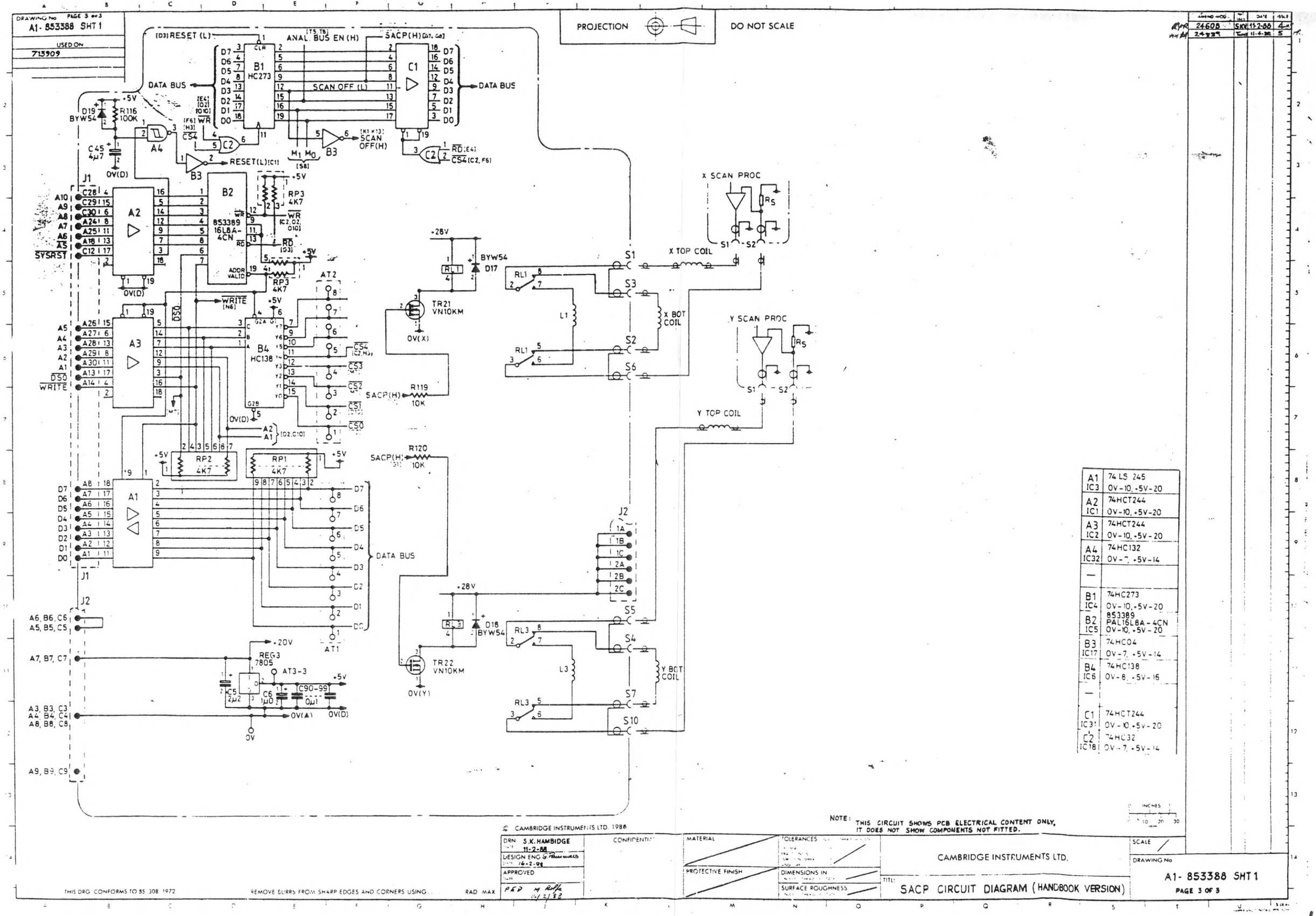
DRAWING No PAGE 3 of 3
A1- 853388 SHT 1
USED ON
713909
PROJECTION
DO NOT SCALE
(D3) RESET (L)
ANAL. BUS EN (H)
SACP(H)
B1 HC273
C1
DATA BUS
SCAN OFF (L)
SCAN OFF(H)
RESET(L)
D19 BYW54
R116 100K
C45 4µ7
A4
B3
C2
J1
A2
B2 853389 16L8A-4CN
RP3 4K7
WR
RD
ADDR VALID
SYSRST
A3
B4 HC138
WRITE
DS0
AT2
CS4
CS3
CS2
CS1
CS0
RP2 4K7
RP1 4K7
A1
AT1
J2
A6, B6, C6
A5, B5, C5
A7, B7, C7
A3, B3, C3
A4, B4, C4
A8, B8, C8
A9, B9, C9
REG3 7805
AT3-3
C5 2µ2
C6 1µ0
C90-99 0µ1
+20V
+5V
0V(A)
0V(D)
0V
+28V
BYW54 D17
RL1
TR21 VN10KM
0V(X)
R119 10K
R120 10K
SACP(H)
D18 BYW54
RL3
TR22 VN10KM
0V(Y)
L1
L3
S1
S2
S3
S4
S5
S6
S7
S10
X SCAN PROC
X TOP COIL
X BOT COIL
Y SCAN PROC
Y TOP COIL
Y BOT COIL
RS
A1 IC3 74 LS 245 0V-10, +5V-20
A2 IC1 74HCT244 0V-10, +5V-20
A3 IC2 74HCT244 0V-10, +5V-20
A4 IC32 74HC132 0V-7, +5V-14
B1 IC4 74HC273 0V-10, +5V-20
B2 IC5 853389 PAL16L8A-4CN 0V-10, +5V-20
B3 IC17 74HC04 0V-7, +5V-14
B4 IC6 74HC138 0V-8, +5V-16
C1 IC31 74HCT244 0V-10, +5V-20
C2 IC18 74HC32 0V-7, +5V-14
NOTE: THIS CIRCUIT SHOWS PCB ELECTRICAL CONTENT ONLY, IT DOES NOT SHOW COMPONENTS NOT FITTED.
© CAMBRIDGE INSTRUMENTS LTD. 1988
DRN S.K. HAMBIDGE 11-2-88
DESIGN ENG 16-2-88
APPROVED
CONFIDENTIAL
MATERIAL
PROTECTIVE FINISH
TOLERANCES
DIMENSIONS IN
SURFACE ROUGHNESS
CAMBRIDGE INSTRUMENTS LTD.
TITLE: SACP CIRCUIT DIAGRAM (HANDBOOK VERSION)
SCALE
DRAWING No A1- 853388 SHT 1
PAGE 3 OF 3
THIS DRG CONFORMS TO BS 308 1972
REMOVE BURRS FROM SHARP EDGES AND CORNERS USING
RAD MAX
24608 SKH 11-2-88 4
24339 11-4-88 5

47

↑ SE: Q1

SECONDARY ELECTRON INPUT

SPECIMEN CURRENT INPUT VIDEO

BACKSCATTERED / TRANS ELECTRON INPUT

AUX 1 INPUT

SK1 SK2 SK3 SK4 SK5

SK7 CH1 OUTPUT

SK11 HARD COPY OUT

SK8 CH2 O/P [U17 SHT 2]

SK6 SPECIMEN CURRENT MEASURE INPUT

SK10 CH4 OUTPUT

SK9 CH3 OUTPUT

TR1 – TR8 = VN10KM

TR9 BC184

TR10 2N2218

TR11 – TR18 = VN10KM

TR19 BC184

TR20 – TR26 = VN10KM

TR29 BC214

TR30 VN10KM

TR31 BC184

TR32 2N2218

TR33 – TR40 = VN10KM

TR41 BC184

TR42 2N2218

TR43 2N2218

TR44 SD219

TR45 BC214

TR46 VN10KM

SD219 – TR28

BSD/TE [T13 W13]

AUX1 [W4, W5, W11]

SCM [W12 P16]

MEAN VIDEO SIGNAL [SHT 2 R17]

VOLTAGE REFERENCE

HEATSINK

SCM MEASURE [U17 SHT 2]

DATA BUS SHT 2 D0 – D7

LINE SCAN BUS

AUX 2 [W9, W11]

INVERT(1) [SHT 2 U15]

INVERT 2 [SHT 2 U15]

BSD/TE [N10, W13]

UNLESS OTHERWISE STATED ALL RESISTORS ARE 0.6W ± 1%

AUX 2 INPUT

GRID REF	IC REF	TYPE	+15V pin	+5V pin	+10V pin	−15V pin	−5V pin	10V$_A$ pin	0V$_A$ pin	GRID REF	IC REF	TYPE	+15V pin	+5V pin	+10V pin	−15V pin	−5V pin	0V$_A$ pin	0V$_D$ pin	GRID REF	IC REF	TYPE	+5V pin	+5V pin	+10V pin	−15V pin	−5V pin	0V$_A$ pin	0V$_D$ pin
A4	61	SW202-GP	13	—	—	4	—	5	—	E6	26	NE5539N								H6	18	HA3-2525-5	7	—	—	4	—	—	—
B1	48	74LS245N	—	20	—	—	—	10	—	E7	25	MP1230KN	20	—	—	—	—	3	10	H7	33	MP1230KN	20	—	—	—	—	3	10
B2	47	74HCT244	—	20	—	—	—	10	—	E8a	20	HA3-2525-5	7	—	—	4	—	—	—	H8	34	NE5539N						7	
B3	45	74HCT244	—	20	—	—	—	10	—	E8b	23	HA3-2525-5	7	—	—	4	—	—	—	J5	17	MP1230KN	20	—	—	—	—	3	10
B4	60	7502JN	14	—	—	15	—	2	—	E9	28	HA3 2525 5	7	—	—	4	—	—	—	J6	19	NE5539N						7	
B5	40	LF353N	8	—	—	4	—	—	—	F2	56	74HC273	—	20	—	—	—	—	10	J7	44	MI-1-524-5	1	—	—	—	17	—	—
B6	15	HA3 2525 5	7	—	—	4	—	—	—	F3	52	74HCT244	—	20	—	—	—	—	10	K7	62	HA3-2525-5	7	—	—	4	—	—	—
C1	53	74HC273	—	20	—	—	—	10	—	F8	24	HA3 2525 5	7	—	—	4	—	—	—	K8	35	HA3-2525-5	7	—	—	4	—	—	—
C2	49	74HC132	—	14	—	—	—	7	G1	7	LH0202CDH8-10	2	—	—	—	—	4	—	—	L5	43	LF353N	8	—	—	—	4	—	—
C3	46	PAL	—	20	—	—	—	10	G2	2	MP1230KN	20	—	—	—	—	3	10	L6	5	MI-1-524-5	1	—	—	—	17	—	—
C4	59	LF353N	8	—	—	4	—	—	—	G3	3	LF351 N	7	—	—	4	—	—	—	L7	41	MI-1-524-5	1	—	—	—	17	—	—
C7	16	3096AE								G4	10	7534JN	19	—	1	—	—	4,5	6	L8	36	MI-1-524-5	1	—	—	—	17	—	—
D1	54	74HC273	—	20	—	—	—	10	—	G5	11	LF353N	8	—	—	4	—	—	—	L9	63	HA3-2525-5	7	—	—	4	—	—	—
D2	55	74HCT541	—	20	—	—	—	10	—	G7	12	MP1230KN	20	—	—	—	—	3	10	M1	1	HA3-2525-5	7	—	—	4	—	—	—
D3	50	74HC138	—	16	—	—	—	8	—	G8	13	NE5539N						7		M2	8	HA3-2525-5	7	—	—	4	—	—	—
D4	27	HA3-2525-5	7	—	—	4	—	—	—	G9	14	HA3 2525 5	7	—	—	4	—	—	—	M3	29	HA3-2525-5	7	—	—	4	—	—	—
D6	22	NE5539N					7			H1	4	CA3096AE								M4	38	HA3-2525-5	7	—	—	4	—	—	—
D7	21	MP1230KN	20	—	—	—	3	10	H2	9	CA3096AE									M5	39	HA3-2525-5	7	—	—	4	—	—	—
E1	58	74HC273	—	20	—	—	—	10	H3	32	CA3096AE									M6	6	HA3-2525-5	7	—	—	4	—	—	—
E2	57	74HC273	—	20	—	—	—	10	H4	30	7534JN	19	—	1	—	—	4,5	6		M7	42	HA3 2525 5	7	—	—	4	—	—	—
E3	51	74HCT139	—	16	—	—	—	8	H5	31	LF353N	8	—	—	4	—	—	—		M8	37	HA3 2525 5	7	—	—	4	—	—	—

CAMBRIDGE INSTRUMENTS LIMITED 1986.
THIS DRAWING IS THE PROPERTY OF THE CAMBRIDGE INSTRUMENT CO. LTD. GROUP OF COMPANIES WHICH INCLUDE CAMBRIDGE INSTRUMENTS LTD., U.K.; CAMBRIDGE INSTRUMENTS GMBH, WEST GERMANY; CAMBRIDGE INSTRUMENTS SARL, FRANCE; CAMBRIDGE INSTRUMENTS INC. U.S.A. THIS DRAWING SHALL NOT BE COPIED OR REPRODUCED IN ANY FORM TO THIRD PERSONS WITHOUT WRITTEN PERMISSION FROM CAMBRIDGE INSTRUMENTS LIMITED.
IN THE U.S.A. THIS DRAWING IS LOANED WITH THE EXPRESSED AGREEMENT THAT THE DRAWING AND INFORMATION THEREIN CONTAINED ARE THE PROPERTY OF CAMBRIDGE INSTRUMENTS INC. AND WILL NOT BE REPRODUCED, COPIED OR OTHERWISE DISPOSED OF DIRECTLY, AND WILL NOT BE USED IN WHOLE OR IN PART TO ASSIST IN MAKING OR TO FURNISH ANY INFORMATION FOR THE MAKING OF DRAWINGS OR PRINTS OR OTHER REPRODUCTIONS THEREOF OR FOR THE MAKING OF APPARATUS OR PARTS THEREOF EXCEPT UPON WRITTEN PERMISSION OF CAMBRIDGE INSTRUMENT, INC. FIRST OBTAINED SPECIFIC AS TO EACH CASE. THE ACCEPTANCE OF THIS DRAWING WILL BE CONSTRUED AS AN ACCEPTANCE OF THE FOREGOING AGREEMENT.

E.O. VIDEO PROCESSOR (1) CIRCUIT DIAGRAM

CAMBRIDGE INSTRUMENTS LIMITED

PRODUCT 5360

CIRCUIT DIAGRAM No. A0-853504 SHEET 1

SHT 1 OF 2

PLESSEY S.M.A.

grüne Brücke von SK10 → SK1 +

48

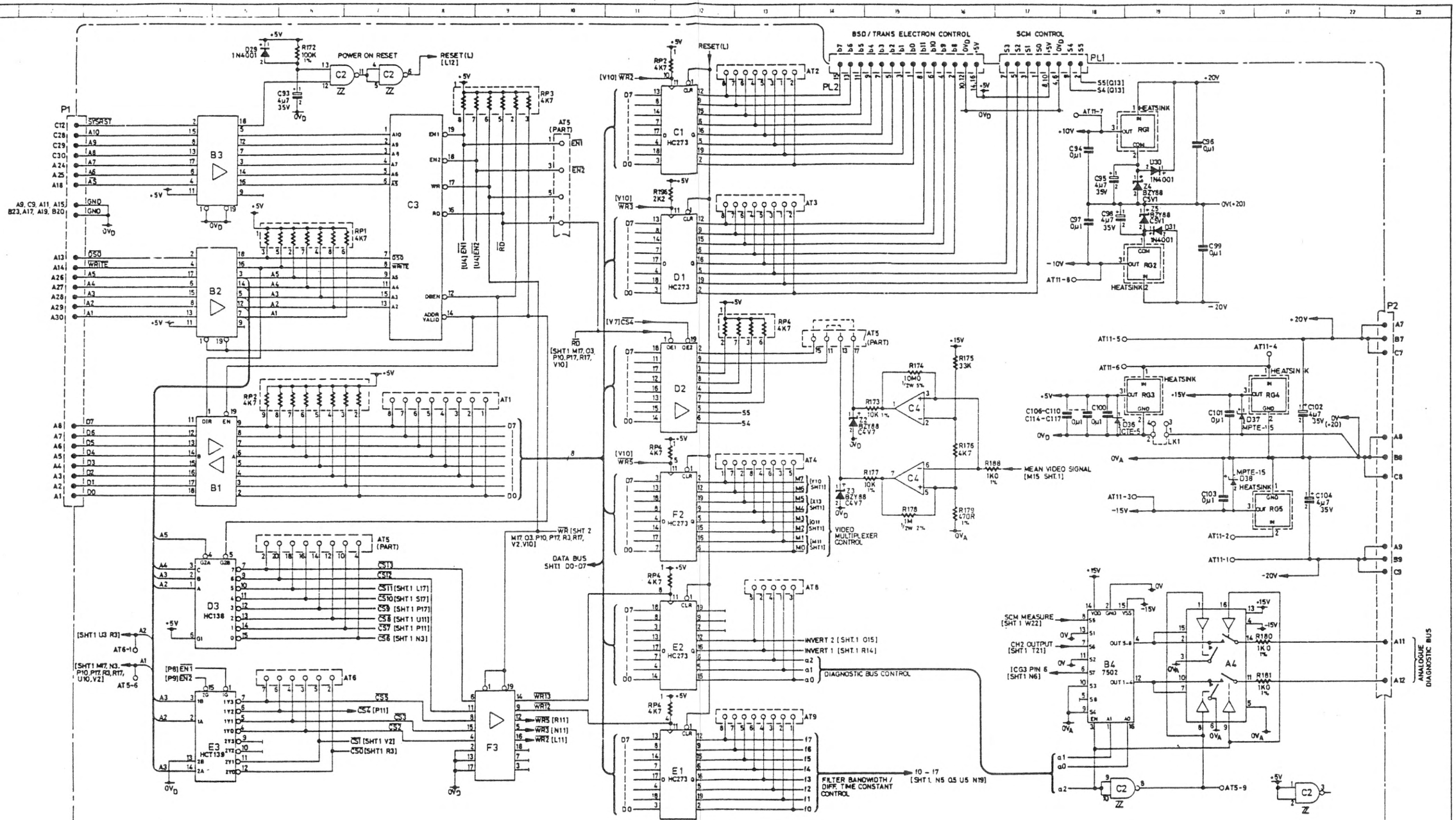

© CAMBRIDGE INSTRUMENTS LIMITED 1986.
THIS DRAWING IS THE PROPERTY OF THE CAMBRIDGE INSTRUMENT CO. LTD. GROUP OF COMPANIES WHICH INCLUDE CAMBRIDGE INSTRUMENTS, LTD., U.K., CAMBRIDGE INSTRUMENTS GMBH WEST GERMANY, CAMBRIDGE INSTRUMENTS SARL, FRANCE, CAMBRIDGE INSTRUMENTS INC, U.S.A. THIS DRAWING SHALL NOT BE COPIED OR REPRODUCED IN ANY FORM TO THIRD PERSONS WITHOUT WRITTEN PERMISSION FROM CAMBRIDGE INSTRUMENTS LIMITED.
IN THE U.S.A. THIS DRAWING IS LOANED WITH THE EXPRESSED AGREEMENT THAT THE DRAWING AND INFORMATION THEREIN CONTAINED ARE THE PROPERTY OF CAMBRIDGE INSTRUMENTS INC. AND WILL NOT BE REPRODUCED, COPIED, OR OTHERWISE DISPOSED OF DIRECTLY AND WILL NOT BE USED IN WHOLE OR IN PART TO ASSIST IN MAKING OR TO FURNISH ANY INFORMATION FOR THE MAKING OF DRAWINGS OR PRINTS OR OTHER REPRODUCTIONS THEREOF OR FOR THE MAKING OF APPARATUS OR PARTS THEREOF EXCEPT UPON WRITTEN PERMISSION OF CAMBRIDGE INSTRUMENTS INC. FIRST OBTAINED SPECIFIC AS TO EACH CASE. THE ACCEPTANCE OF THIS DRAWING WILL BE CONSTRUED AS AN ACCEPTANCE OF THE FOREGOING AGREEMENT.

E.O. VIDEO PROCESSOR (1) CIRCUIT DIAGRAM

CAMBRIDGE INSTRUMENTS LIMITED

PRODUCT 5360

A0-853504 SHEET 1

SHT 2 OF 2

CIRCUIT DIAGRAM No.
A1 - 853562 SHT 1

BACKPLANE - SOCKETS 1 to 11

(UPPER SLOTS 1 TO 11)

Page 2

BACKPLANE - SOCKETS 12 TO 24

(UPPER SLOTS 12 TO 24)

Page 3

BACKPLANE - SOCKETS 35 TO 41

(LOWER SLOTS 5 TO 11)

Page 4

BACKPLANE - SOCKETS 42 to 54

(LOWER SLOTS 12 TO 24)

Page 5

© CAMBRIDGE INSTRUMENTS 1987

WARNING: CAD PRODUCED CIRCUIT DO NOT HAND MODIFY

TITLE
S360 VME/IP BACKPLANE
CIRCUIT DIAGRAM

CAMBRIDGE INSTRUMENTS
LIMITED

CIRCUIT DIAGRAM NO.
A1 - 853562
SHEET 1 PAGE 1 OF 5

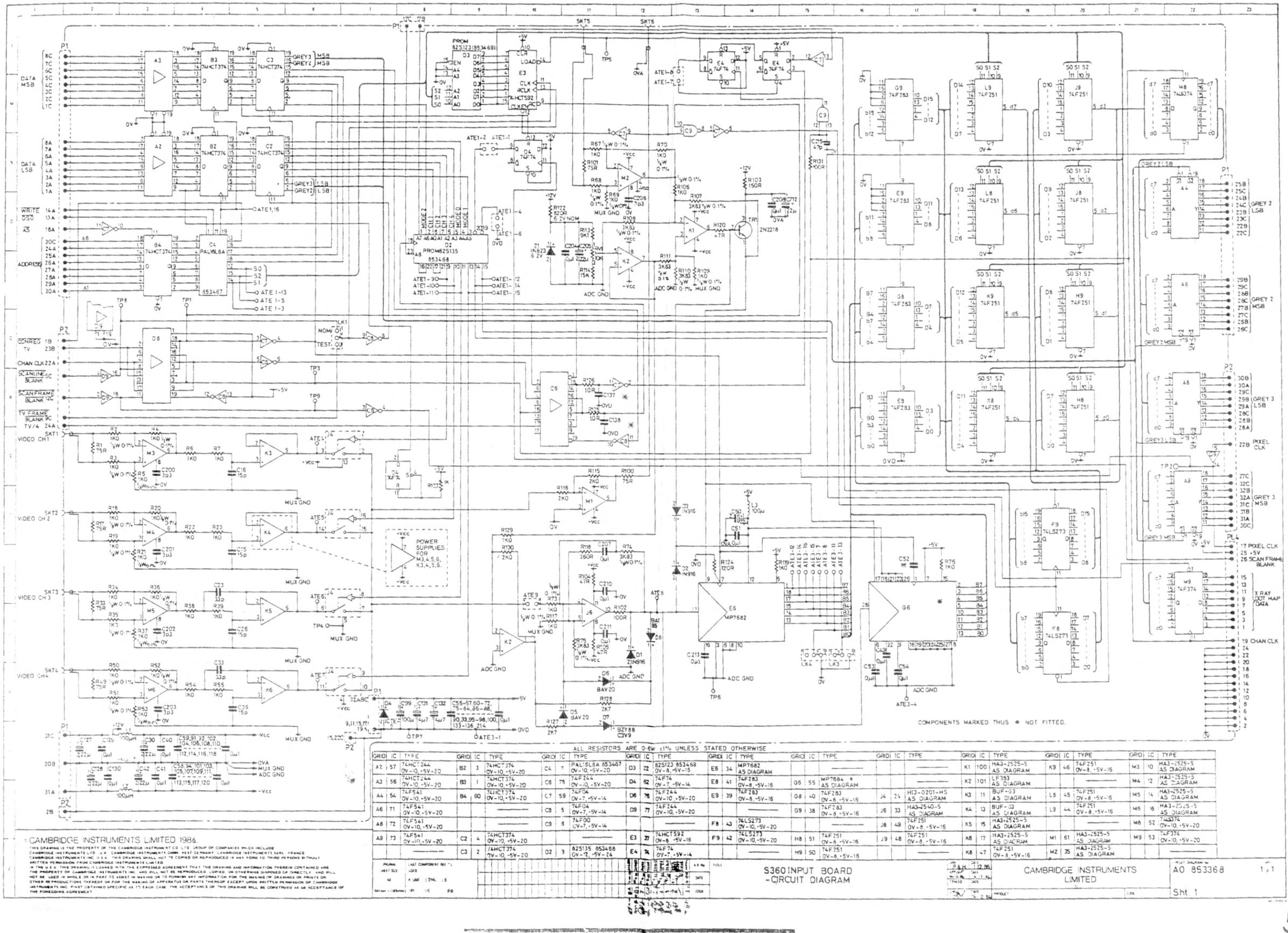

ALL RESISTORS ARE 0·6W ±1% UNLESS STATED OTHERWISE

GRID	IC	TYPE	GRID	IC	TYPE	GRID	IC	TYPE	GRID	IC	TYPE	GRID	IC	TYPE	GRID	IC	TYPE	GRID	IC	TYPE	GRID	IC	TYPE	GRID	IC	TYPE
A2	57	74HCT244 0V-10, +5V-20	B2	3	74HCT374 0V-10, +5V-20	C4	7	PAL16L8A 853467 0V-10, +5V-20	D3	22	825123 853469 0V-8, +5V-15	E5	34	MP7682 AS DIAGRAM							K1	100	HA3-2525-5 AS DIAGRAM	K9	46	74F251 0V-8, +5V-16	M3	10	HA3-2525-5 AS DIAGRAM
A3	56	74HCT244 0V-10, +5V-20	B3	1	74HCT374 0V-10, +5V-20	C6	75	74F244 0V-10, +5V-20	D4	62	74F74 0V-7, +5V-14	E8	41	74F283 0V-8, +5V-16	G6	55	MP7684 * AS DIAGRAM					K2	101	LF353 AS DIAGRAM				M4	12	HA3-2525-5 AS DIAGRAM
A4	54	74F541 0V-10, +5V-20	B4	60	74HCT374 0V-10, +5V-20	C7	59	74F04 0V-7, +5V-14	D6	76	74F244 0V-10, +5V-20	E9	39	74F283 0V-8, +5V-16	G8	40	74F283 0V-8, +5V-16	J4	24	HI3-0201-HS AS DIAGRAM	K3	11	BUF-03 AS DIAGRAM	L8	45	74F251 0V-8, +5V-16	M5	14	HA3-2525-5 AS DIAGRAM
A6	71	74F541 0V-10, +5V-20				C8	5	74F04 0V-7, +5V-14	D9	77	74F244 0V-10, +5V-20				G9	38	74F283 0V-8, +5V-16	J6	33	HA3-2540-5 AS DIAGRAM	K4	13	BUF-03 AS DIAGRAM	L9	44	74F251 0V-8, +5V-16	M6	16	HA3-2525-5 AS DIAGRAM
A8	72	74F541 0V-10, +5V-20				C9	6	74F00 0V-7, +5V-14				F8	43	74LS273 0V-10, +5V-20				J8	49	74F251 0V-8, +5V-16	X5	15	HA3-2525-5 AS DIAGRAM				M8	52	74S374 0V-10, +5V-20
A9	73	74F541 0V-10, +5V-20	C2	4	74HCT374 0V-10, +5V-20				E3	37	74HCT592 0V-8, +5V-16	F9	42	74LS273 0V-10, +5V-20	H8	51	74F251 0V-8, +5V-16	J9	48	74F251 0V-8, +5V-16	K6	17	HA3-2525-5 AS DIAGRAM	M1	61	HA3-2525-5 AS DIAGRAM	M9	53	74F374 0V-10, +5V-20
			C3	2	74HCT374 0V-10, +5V-20	D2	9	825135 853468 0V-12, +5V-24	E4	74	74F74 0V-7, +5V-14				H9	50	74F251 0V-8, +5V-16				K8	47	74F251 0V-8, +5V-16	M2	75	HA3-2525-5 AS DIAGRAM			

© CAMBRIDGE INSTRUMENTS LIMITED 1986.
THIS DRAWING IS THE PROPERTY OF THE CAMBRIDGE INSTRUMENTS CO. LTD. GROUP OF COMPANIES WHICH INCLUDE CAMBRIDGE INSTRUMENTS LTD. U.K. CAMBRIDGE INSTRUMENTS GMBH. WEST GERMANY. CAMBRIDGE INSTRUMENTS SARL. FRANCE CAMBRIDGE INSTRUMENTS INC. U.S.A. THIS DRAWING SHALL NOT BE COPIED OR REPRODUCED IN ANY FORM TO THIRD PERSONS WITHOUT WRITTEN PERMISSION FROM CAMBRIDGE INSTRUMENTS LIMITED.
IN THE U.S.A. THIS DRAWING IS LOANED WITH THE EXPRESSED AGREEMENT THAT THE DRAWING AND INFORMATION THEREIN CONTAINED ARE THE PROPERTY OF CAMBRIDGE INSTRUMENTS INC. AND WILL NOT BE REPRODUCED, COPIED, OR OTHERWISE DISPOSED OF DIRECTLY AND WILL NOT BE USED IN WHOLE OR IN PART TO ASSIST IN MAKING OR TO FURNISH ANY INFORMATION FOR THE MAKING OF DRAWINGS OR PRINTS OR OTHER REPRODUCTIONS THEREOF OR FOR THE MAKING OF APPARATUS OR PARTS THEREOF EXCEPT UPON WRITTEN PERMISSION OF CAMBRIDGE INSTRUMENTS INC. FIRST OBTAINED SPECIFIC AS TO EACH CASE. THE ACCEPTANCE OF THIS DRAWING WILL BE CONSTRUED AS AN ACCEPTANCE OF THE FOREGOING AGREEMENT.

S360 INPUT BOARD
-CIRCUIT DIAGRAM

CAMBRIDGE INSTRUMENTS LIMITED

A0 853368 1 > 1

Sht. 1

55

Grid	IC	Type	+5V	0V	Grid	IC	Type	+5V	0V	Grid	IC	Type	+5V	0V
A1	70	74F244	20	10	D6	20	853473	24	12	J1	52	74F04	14	7
A2	18	74F541	20	10	D7	50	74F574	20	10	J2	71	74HCT00	14	7
A3	12	74HCT574	20	10						J3	47	74F283	16	8
A4	13	74HCT574	20	10	E1	34	74HCT574	20	10	J4	74	16L8A(853661)	20	10
A5	37	74F564	20	10	E2	36	74HCT574	20	10	J5	23	74 AS 574	20	10
A6	38	74F564	20	10	E3	3	74 F 181	24	12	J6	22	74AS 574	20	10
A7	55	74F574	20	10						J7	44	16L8A(853470X	20	10
					E7	57	2149-35	18	9					
B1	19	74F541	20	10						K2	54	74F04	14	7
B2	17	74HCT574	20	10	F1	53	74HCT574	20	10	K3	48	74F283	16	8
B3	14	74HCT574	20	10	F2	29	74HCT574	20	10	K4	50	74F283	16	8
B4	15	74HCT574	20	10	F3	63	74HCT574	20	10	K5	25	74HCT574	20	10
B5	10	74F574	20	10						K6	24	74HCT574	20	10
B6	61	74F574	20	10										
B7	59	74F574	20	10	F6	30	MPY016KJ1	49, 48	47, 46	L1	6	16L8A(853471)	20	10
										L2	39	16L8A(853472)	20	10
C1	16	74HCT574	20	10						L3	66	74F04	14	7
C2	31	74HCT574	20	10	F7	88	2149-35	18	9	L3	66	74F04	14	7
C3	65	74F574	20	10						L4	43	74F283	16	8
C4	9	74HCT574	20	10	G1	46	74HCT574	20	10	L5	41	74HCT574	20	10
C5	11	74F574	20	10	G2	5	74F182	16	8	L6	40	74HCT574	20	10
C6	54	74F541	20	10	G3	2	74 F 181	24	12	L7	58	74F574	20	10
C7	56	74F574	20	10	G7	52	74HCT590	16	8					
					H1	35	74HCT574	20	10	MQa	75	74F74	14	7
D1	32	74HCT574	20	10	H2	28	74HCT574	20	10	M2b	7	74F08	14	7
D2	33	74HCT574	20	10	H3	1	74 F 181	24	12	M3	4	74HCT374	20	10
D3	4	74 F 181	24	12	H4	73	16L8A(853554)	20	10	M4	69	74HCT74	14	7
					H5	27	74F541	20	10	M5	43	74F574	20	10
D5	21	853473	24	12	H6	26	74F541	20	10	M6	42	74F574	20	10
					H7	51	74F574	20	10	M7	72	74F574	20	10

CAMBRIDGE INSTRUMENTS LIMITED 1986

THIS DRAWING IS THE COPYRIGHT OF THE CAMBRIDGE INSTRUMENTS CO. LTD. GROUP OF COMPANIES WHICH INCLUDES CAMBRIDGE INSTRUMENTS LTD., CAMBRIDGE INSTRUMENTS INC., CAMBRIDGE INSTRUMENTS GMBH, KEW, GERMANY, CAMBRIDGE INSTRUMENTS S.A.R.L., FRANCE, CAMBRIDGE INSTRUMENTS S.R.L., ITALY. THIS DRAWING MUST NOT BE COPIED OR REPRODUCED IN ANY FORM TO THIRD PARTIES WITHOUT WRITTEN PERMISSION FROM CAMBRIDGE INSTRUMENTS LIMITED.

IN THE USA THIS DRAWING IS LOANED WITH THE EXPRESS AGREEMENT THAT THE DRAWING AND INFORMATION THEREIN CONTAINED ARE THE PROPERTY OF CAMBRIDGE INSTRUMENTS INC. AND WILL NOT BE REPRODUCED, COPIED OR OTHERWISE DISPOSED OF, DIRECTLY OR INDIRECTLY, AND WILL NOT BE USED IN WHOLE OR IN PART TO ASSIST IN MAKING OR FURNISH ANY INFORMATION FOR THE MAKING OR DRAWING OR PRINTS FOR OTHER REPRODUCTIONS OR FOR OR FOR THE MAKING OF APPARATUS OR PARTS THEREOF EXCEPT UPON WRITTEN PERMISSION OF CAMBRIDGE INSTRUMENTS INC. AND THE OBTAINING OF SPECIFIC AS TO EACH SUCH USE. ACCEPTANCE OF THIS DRAWING WILL BE CONSTRUED AS AN ACCEPTANCE OF THE FOREGOING AGREEMENT.

1) ALL RESISTORS ARE 0.6 WATT, 1% TOLERANCED, UNLESS OTHERWISE SPECIFIED

GREY PROCESSOR CIRCUIT DIAGRAM

CAMBRIDGE INSTRUMENTS LIMITED

5360

AO 854368

SHT 1

56

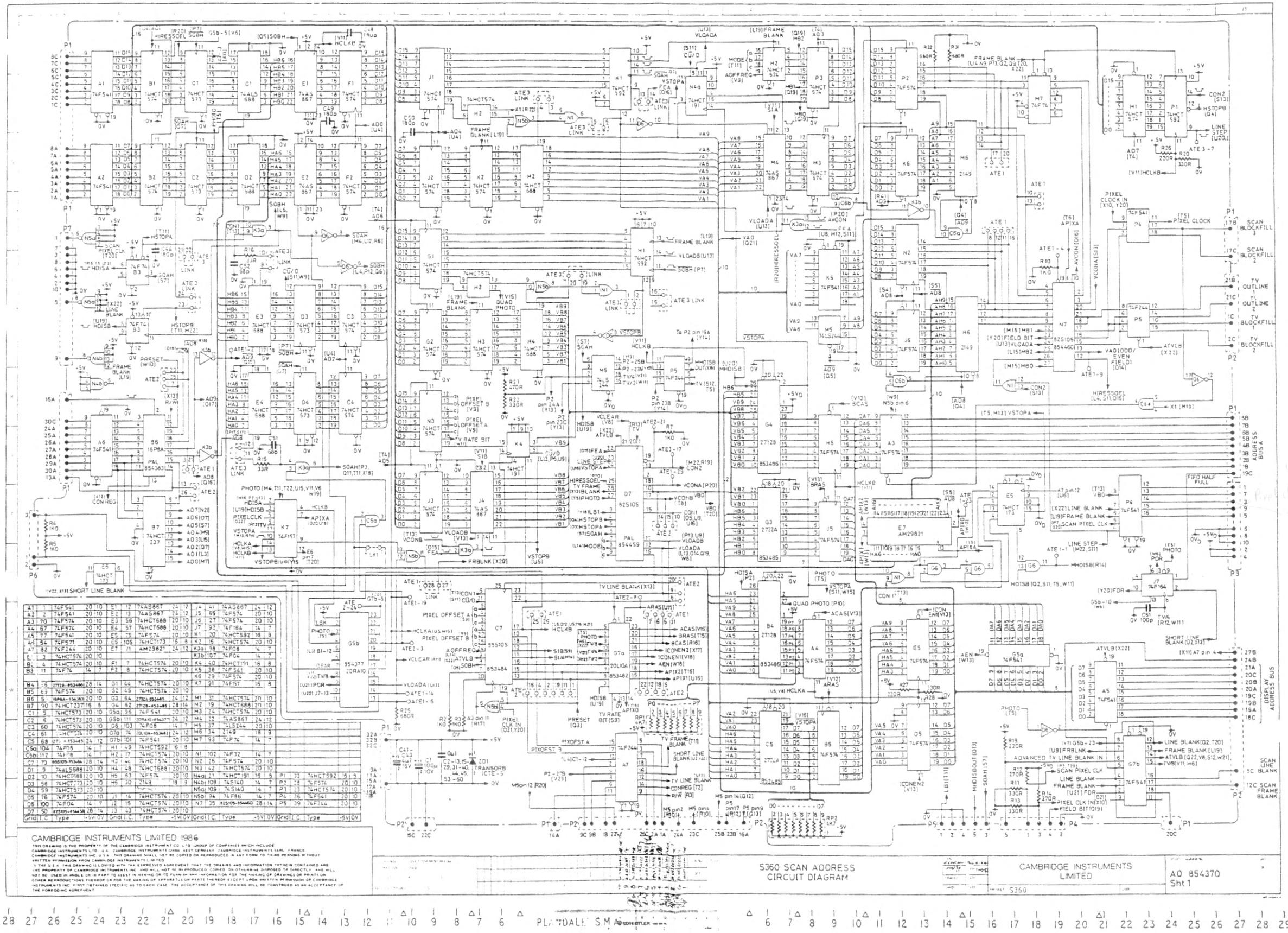
S360 SCAN ADDRESS
CIRCUIT DIAGRAM
CAMBRIDGE INSTRUMENTS
LIMITED
A0 854370
Sht 1
S360
CAMBRIDGE INSTRUMENTS LIMITED 1986
THIS DRAWING IS THE PROPERTY OF THE CAMBRIDGE INSTRUMENT CO. LTD. GROUP OF COMPANIES WHICH INCLUDE
CAMBRIDGE INSTRUMENTS LTD. U.K. CAMBRIDGE INSTRUMENTS GMBH WEST GERMANY CAMBRIDGE INSTRUMENTS SARL FRANCE
CAMBRIDGE INSTRUMENTS INC. U.S.A. THIS DRAWING SHALL NOT BE COPIED OR REPRODUCED IN ANY FORM TO THIRD PERSONS WITHOUT
WRITTEN PERMISSION FROM CAMBRIDGE INSTRUMENTS LIMITED
IN THE U.S.A. THIS DRAWING IS LOANED WITH THE EXPRESSED AGREEMENT THAT THE DRAWING AND INFORMATION THEREIN CONTAINED ARE
THE PROPERTY OF CAMBRIDGE INSTRUMENTS INC. AND WILL NOT BE REPRODUCED COPIED OR OTHERWISE DISPOSED OF DIRECTLY AND WILL
NOT BE USED IN WHOLE OR IN PART TO ASSIST IN MAKING OR TO FURNISH ANY INFORMATION FOR THE MAKING OF DRAWINGS OR PRINTS OR
OTHER REPRODUCTIONS THEREOF OR FOR THE MAKING OF APPARATUS OR PARTS THEREOF EXCEPT UPON WRITTEN PERMISSION OF CAMBRIDGE
INSTRUMENTS INC. FIRST OBTAINED (SPECIFIC AS TO EACH CASE) THE ACCEPTANCE OF THIS DRAWING WILL BE CONSTRUED AS AN ACCEPTANCE OF
THE FOREGOING AGREEMENT
PLAINDALE S.M.A.
58

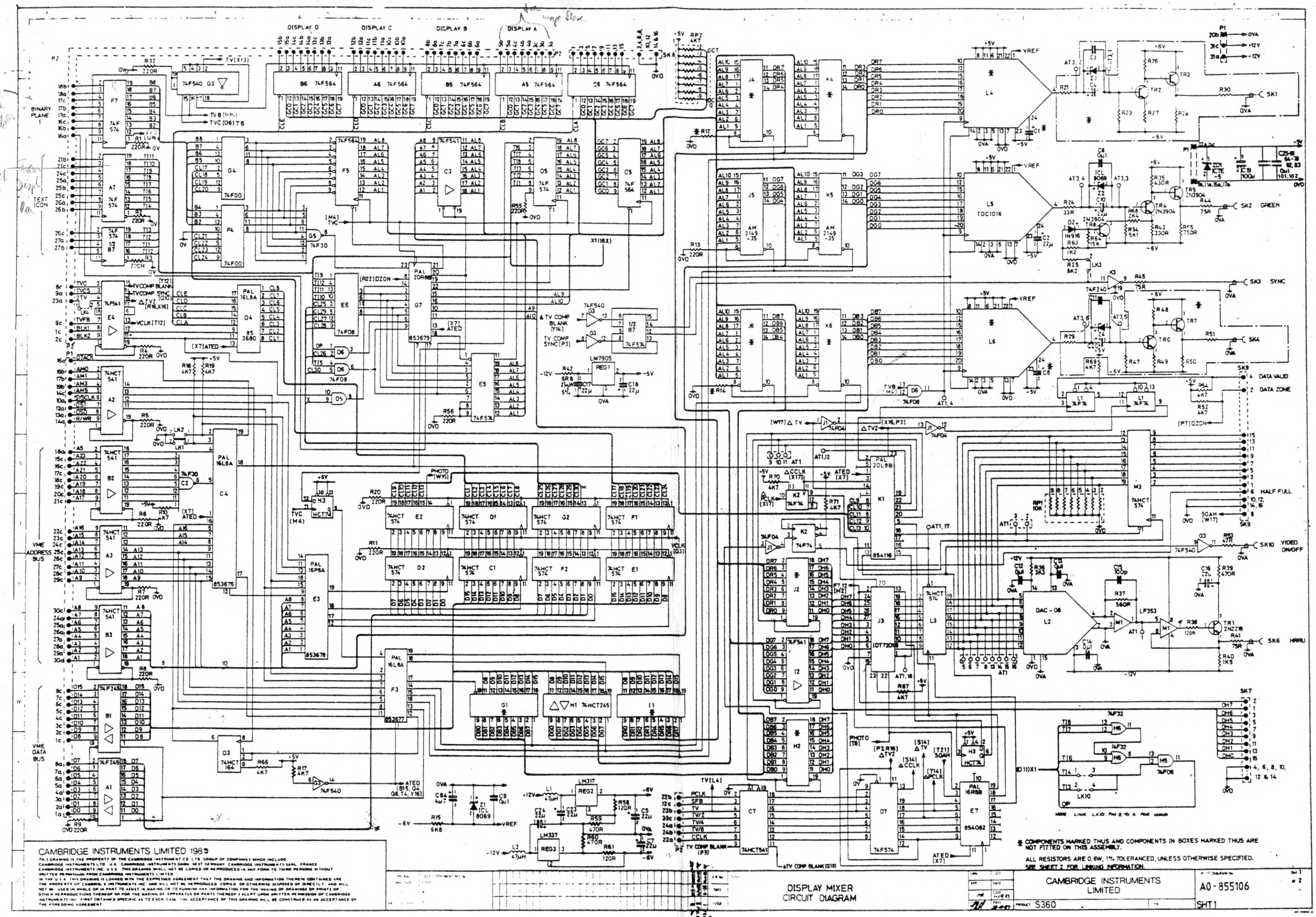
DISPLAY D
DISPLAY C
DISPLAY B
DISPLAY A
BINARY PLANE 1
TEXT ICON
VME ADDRESS BUS
VME DATA BUS
DISPLAY MIXER CIRCUIT DIAGRAM
CAMBRIDGE INSTRUMENTS LIMITED
A0-855106
SHT1
PRODUCT S360
DRAWN
CHECKED
APPROVED
DATE
SIZE
SHT 1
2
* COMPONENTS MARKED THUS AND COMPONENTS IN BOXES MARKED THUS ARE NOT FITTED ON THIS ASSEMBLY.
ALL RESISTORS ARE 0.6W, 1% TOLERANCED, UNLESS OTHERWISE SPECIFIED.
SEE SHEET 2 FOR LINKING INFORMATION.
CAMBRIDGE INSTRUMENTS LIMITED 1985
THIS DRAWING IS THE PROPERTY OF THE CAMBRIDGE INSTRUMENT CO LTD GROUP OF COMPANIES WHICH INCLUDE
CAMBRIDGE INSTRUMENTS LTD U.K. CAMBRIDGE INSTRUMENTS GMBH WEST GERMANY CAMBRIDGE INSTRUMENTS SARL FRANCE
CAMBRIDGE INSTRUMENTS INC U.S.A. THIS DRAWING SHALL NOT BE COPIED OR REPRODUCED IN ANY FORM TO THIRD PERSONS WITHOUT WRITTEN PERMISSION FROM CAMBRIDGE INSTRUMENTS LIMITED
IN THE U.S.A. THIS DRAWING IS LOANED WITH THE EXPRESSED AGREEMENT THAT THE DRAWING AND INFORMATION THEREIN CONTAINED ARE THE PROPERTY OF CAMBRIDGE INSTRUMENTS INC AND WILL NOT BE REPRODUCED COPIED OR OTHERWISE DISPOSED OF DIRECTLY AND WILL NOT BE USED IN WHOLE OR IN PART TO ASSIST IN MAKING OR TO FURNISH ANY INFORMATION FOR THE MAKING OF DRAWINGS OR PRINTS OR OTHER REPRODUCTIONS THEREOF OR FOR THE MAKING OF APPARATUS OR PARTS THEREOF EXCEPT UPON WRITTEN PERMISSION OF CAMBRIDGE INSTRUMENTS INC. FIRST OBTAINED SPECIFIC AS TO EACH CASE. THE ACCEPTANCE OF THIS DRAWING WILL BE CONSTRUED AS AN ACCEPTANCE OF THE FOREGOING AGREEMENT.

59

A1-855106 SH 1

713907

Grid	IC	Description	0V	+5V	Grid	IC	Description	0V	+5V	Grid	IC	Description	0V	+5V
A1	18	74F245	10	20	E1	40	74HCT574	10	20	J1	97	74F04	7	14
A2	13	74HCT541	10	20	E2	33	74HCT574	10	20	J2	74	*	10	20
A3	15	74HCT541	10	20	E3	41	PAL 853678 16P8A	10	20	J3	79	IDT7201	14	28
					E4	12	74F541	10	20	J4	54	*	9	18
A5	1	74F564	10	20	E5	47	74F574	10	20	J5	56	AM2149 - 35	9	18
A6	5	74F564	10	20	E6	91	74F08	7	14	J6	58	*	9	18
A7	10	74F574	10	20	E7	100	PAL 854082 16R8B	10	20					
					F1	39	74HCT574	10	20					
B1	17	74F245	10	20	F2	38	74HCT574	10	20	K1	88	PAL 854116 20L8B	12	24
B2	14	74HCT541	10	20	F3	43	PAL 853677 16L8A	10	20	K2	94	74F74	7	14
B3	16	74HCT541	10	20	F4	20	74F00	7	14	K3	95	74F240	10	20
					F5	46	74F564	10	20	K4	55	*	9	18
B5	3	74F564	10	20	F7	9	74F574	10	20	K5	57	AM2149 - 35	9	18
B6	7	74F564	10	20	G1	64	*	10	20	K6	59	*	9	18
B7	11	74F574	10	20	G2	37	74HCT574	10	20	L1	96	74F14	7	14
					G3	93	74F540	10	20	L2	80	DAC - 08	as cct	
C1	36	74HCT574	10	20	G4	19	74F00	7	14	L3	78	74HCT574	10	20
C2	28	74F30	7	14	G5	21	74F30	7	14	L4	67	*	7	6
C3	48	74F541	10	20	G7	44	PAL 853679 20R8-B	12	24	L5	69	TDC 1016	7	6
C4	29	PAL 853675 16L8A	10	20						L6	71	*	7	6
C5	45	74F564	10	20	H6	101	74F32	7	14					
C6	83	74F564	10	20	H1	63	74HCT245	10	20	M1	81	LF353	as cct	
C7	98	74HCT541	10	20	H2	76	*	10	20					
					H3	2	74HCT74	7	14	M3	90	74HCT574	10	20
D1	35	74HCT574	10	20	H5	102	74F08	7	14					
D2	34	74HCT574	10	20	I1	62	*	10	20					
D3	30	74HCT164	7	14	I2	75	74F541	10	20					
D4	85	PAL 853680 16L8A	10	20										
D5	86	74F574	10	20										
D6	92	74F08	7	14										
D7	99	74F574	10	20										

*:-COMPONENTS MARKED THUS ARE NOT FITTED ON THIS ASSEMBLY

LINK INFORMATION :-

LK1 - MUST BE FITTED FOR CORRECT ADDRESSING.

LK2 - NORMALLY FITTED, REMOVED WHEN PCB IS SUPPLIED AS 2nd MONOCHROME OPTION.

LK3 - MUST BE FITTED FOR COMPOSITE VIDEO / SYNC SIGNAL.

LK4 - MUST BE FITTED

CAMBRIDGE INSTRUMENTS LIMITED 1989

DISPLAY MIXER
CIRCUIT DIAGRAM

CAMBRIDGE INSTRUMENTS LIMITED

S360

A1-855106

SHT.1

A1 IC2	74F245 +5V-20, 0V-10	C4 IC53	PROM 825321N (853511) +5V-24, 0V-12	F1 IC3	74HCT245 +5V-20, 0V-10		
A2 IC3	74F245 +5V-20, 0V-10	C6 IC58	74F574 +5V-20, 0V-10	F2 IC6	74F574 +5V-20, 0V-10		
A3 IC56	PAL16C1(853403) +5V-20, 0V-10	C7 IC62	PAL16L8A(853510) +5V-20, 0V-10	F3 IC11	74HCT541 +5V-20, 0V-10	H1 IC37	74HCT646 +5V-24, 0V-12
A4 IC57	PAL20L8B(853464) +5V-24, 0V-12	D1 IC2	74HCT646 +5V-24, 0V-12	F4 IC52	74HCT574 +5V-20, 0V-10	H2 IC29	TMS4464-15 +5V-9, 0V-18
A5 IC67	74F574 +5V-20, 0V-10	D2 IC13	AM2149-35 +5V-18, 0V-9	F5 IC68	74HCT574 +5V-20, 0V-10	H3 IC30	TMS4464-15 +5V-9, 0V-18
A7 IC50	74F240 +5V-20, 0V-10	D3 IC66	74F04 +5V-14, 0V-7	F6 IC49	74HCT574 +5V-20, 0V-10	H4 IC43	74LS168 +5V-18, 0V-8
B1 IC1	74HCT574 +5V-20, 0V-10	D4 IC63	PAL16L8A(853508) +5V-24, 0V-12	F7 IC54	PAL16L8A(853508) +5V-20, 0V-10	H5 IC38	74HCT574 +5V-20, 0V-10
B2 IC8	PAL20X8(853465) +5V-24, 0V-12	D5 IC60	74F574 +5V-20, 0V-10	G1 IC28	74HCT574 +5V-20, 0V-10	J1 IC35	74HCT646 +5V-24, 0V-12
B3 IC64	74F574 +5V-20, 0V-10	D7 IC44	PAL16L8A(853505) +5V-20, 0V-10	G2 IC15	74HCT574 +5V-20, 0V-10	J2 IC27	TMS4464-15 +5V-9, 0V-18
B6 IC58	74F574 +5V-20, 0V-10	E1 IC9	74HCT245 +5V-20, 0V-10	G3 IC47	74F541 +5V-20, 0V-10	J3 IC28	TMS4464-15 +5V-9, 0V-18
B7 IC51	74F574 +5V-20, 0V-10	E2 IC14	AM2149-35 +5V-18, 0V-9	G4 IC39	74LS168 +5V-18, 0V-8	J4 IC42	74LS168 +5V-18, 0V-8
C1 IC7	PAL20X8(853465) +5V-24, 0V-12	E3 IC10	74F574 +5V-20, 0V-10	G5 IC34	74F574 +5V-20, 0V-10	J5 IC46	74HCT574 +5V-20, 0V-10
C2 IC12	AM2149-35 +5V-18, 0V-9	E6 IC61	74F574 +5V-20, 0V-10	G6 IC32	74F574 +5V-20, 0V-10	J6 IC16	HM6264P-10 +5V-28, 0V-14
C3 IC25	74HC174 +5V-14, 0V-7	E7 IC45	PAL16L8A(853507) +5V-20, 0V-10	G7 IC59	PAL16L8A(853509) +5V-20, 0V-10	K1 IC33	74HCT646 +5V-24, 0V-12
Grid	Type	Grid	Type	Grid	Type	Grid	Type

						K2 IC26	TMS4464-15 +5V-9, 0V-18
						K3 IC23	TMS4464-15 +5V-9, 0V-18
						K4 IC41	74LS166 -5V-16, 0V-8
						K5 IC22	74HCT245 +5V-20, 0V-10
						K6 IC17	HM6168HP-55 +5V-20, 0V-10
						K7 IC20	74HCT541 +5V-20, 0V-10
						L1 IC31	74HCT646 +5V-24, 0V-12
						L2 IC24	TMS4464-15 +5V-9, 0V-18
						L3 IC24	TMS4464-15 +5V-9, 0V-18
						L4 IC40	74LS166 -5V-16, 0V-8
						L5 IC19	74HCT245 +5V-20, 0V-10
						L6 IC18	HM6168HP-55 +5V-20, 0V-10
						L7 IC21	74HCT244 +5V-20, 0V-10
Grid	Type	Grid	Type	Grid	Type	Grid	Type

© CAMBRIDGE INSTRUMENTS LIMITED 1986.

THIS DRAWING IS THE PROPERTY OF THE CAMBRIDGE INSTRUMENT CO. LTD. GROUP OF COMPANIES WHICH INCLUDE CAMBRIDGE INSTRUMENTS LTD., U.S.A. CAMBRIDGE INSTRUMENTS GMBH, WEST GERMANY. CAMBRIDGE INSTRUMENTS SARL, FRANCE. CAMBRIDGE INSTRUMENTS INC. U.S.A. THIS DRAWING SHALL NOT BE COPIED OR REPRODUCED IN ANY FORM TO THIRD PERSONS WITHOUT WRITTEN PERMISSION FROM CAMBRIDGE INSTRUMENTS LIMITED.

IN THE U.S.A. THIS DRAWING IS LOANED WITH THE EXPRESSED AGREEMENT THAT THE DRAWING AND INFORMATION THEREIN CONTAINED ARE THE PROPERTY OF CAMBRIDGE INSTRUMENTS INC. AND WILL NOT BE REPRODUCED, COPIED OR OTHERWISE DISPOSED OF DIRECTLY AND WILL NOT BE USED IN WHOLE OR IN PART TO ASSIST IN MAKING OR TO FURNISH ANY INFORMATION FOR THE MAKING OF DRAWINGS OR PRINTS OR OTHER REPRODUCTIONS THEREOF OR FOR THE MAKING OF APPARATUS OR PARTS THEREOF EXCEPT UPON WRITTEN PERMISSION OF CAMBRIDGE INSTRUMENTS INC. FIRST OBTAINED SPECIFIC AS TO EACH CASE. THE ACCEPTANCE OF THIS DRAWING WILL BE CONSTRUED AS AN ACCEPTANCE OF THE FOREGOING AGREEMENT.

ALL RESISTORS ARE 0·6WATT, 1% TOLERANCED, UNLESS OTHERWISE SPECIFIED

ORIGINAL SHEET SIZE: A3	LAST COMPONENT REF No: A43 C68		

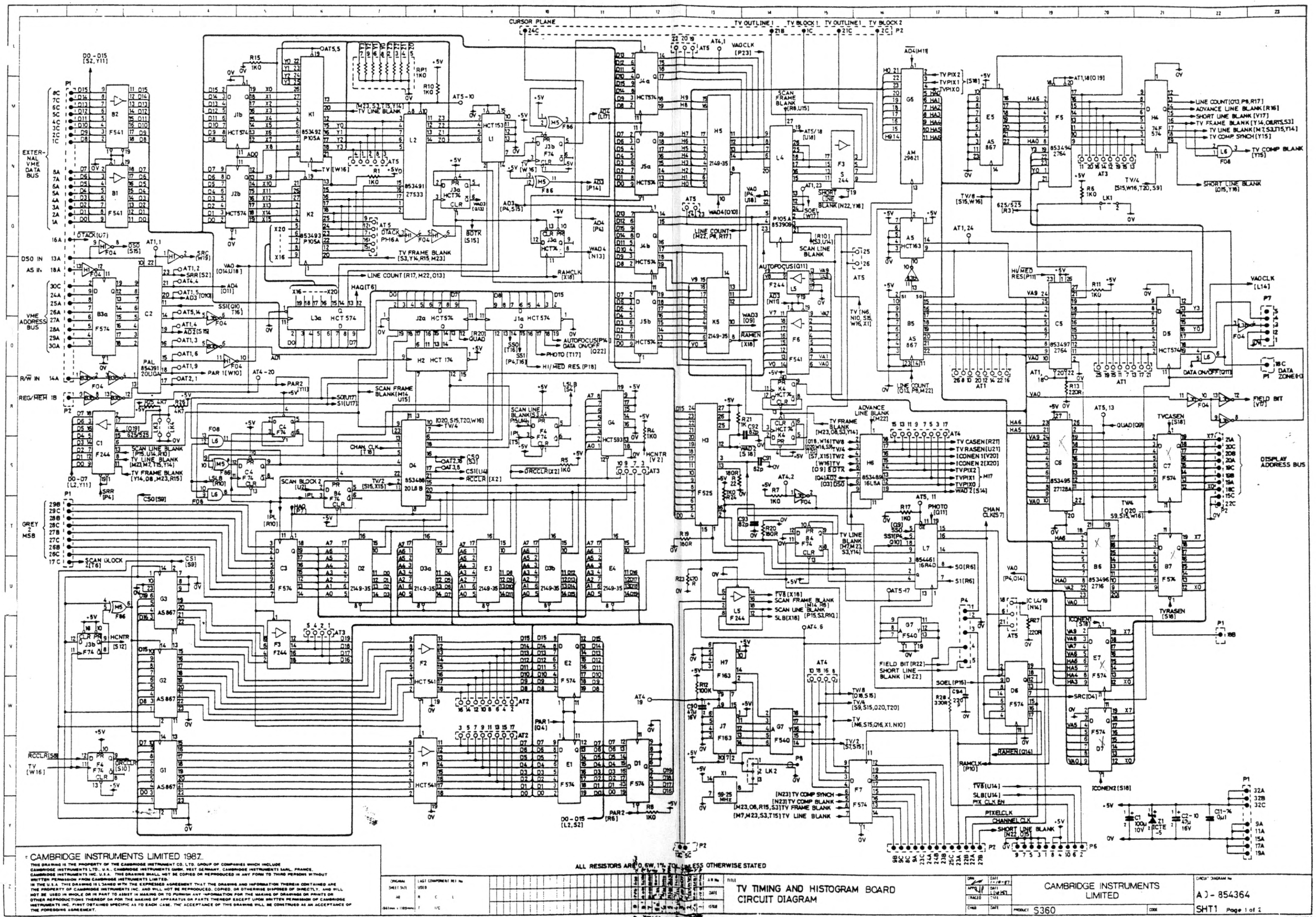

© CAMBRIDGE INSTRUMENTS LIMITED 1987.

THIS DRAWING IS THE PROPERTY OF THE CAMBRIDGE INSTRUMENT CO. LTD. GROUP OF COMPANIES WHICH INCLUDE CAMBRIDGE INSTRUMENTS LTD., U.K., CAMBRIDGE INSTRUMENTS GMBH, WEST GERMANY, CAMBRIDGE INSTRUMENTS SARL, FRANCE, CAMBRIDGE INSTRUMENTS INC. U.S.A. THIS DRAWING SHALL NOT BE COPIED OR REPRODUCED IN ANY FORM TO THIRD PERSONS WITHOUT WRITTEN PERMISSION FROM CAMBRIDGE INSTRUMENTS LIMITED.

IN THE U.S.A. THIS DRAWING IS LOANED WITH THE EXPRESSED AGREEMENT THAT THE DRAWING AND INFORMATION THEREIN CONTAINED ARE THE PROPERTY OF CAMBRIDGE INSTRUMENTS INC. AND WILL NOT BE REPRODUCED, COPIED, OR OTHERWISE DISPOSED OF DIRECTLY, AND WILL NOT BE USED IN WHOLE OR IN PART TO ASSIST IN MAKING OR TO FURNISH ANY INFORMATION FOR THE MAKING OF DRAWINGS OR PRINTS OR OTHER REPRODUCTIONS THEREOF OR FOR THE MAKING OF APPARATUS OR PARTS THEREOF EXCEPT UPON WRITTEN PERMISSION OF CAMBRIDGE INSTRUMENTS INC. FIRST OBTAINED SPECIFIC AS TO EACH CASE. THE ACCEPTANCE OF THIS DRAWING WILL BE CONSTRUED AS AN ACCEPTANCE OF THE FOREGOING AGREEMENT.

ORIGINAL SHEET SIZE A0	LAST COMPONENT REF No USED R C L T I/C	A.R. No DATE ISSUE	TITLE TV TIMING AND HISTOGRAM BOARD CIRCUIT DIAGRAM
DRN	DATE 1-10-87		CAMBRIDGE INSTRUMENTS LIMITED
APPD	DATE 1-10-87		
TRACED	DATE		
CHKD	DATE		PRODUCT S360
CODE			CIRCUIT DIAGRAM No A0-854364
			SHT1 Page 1 of 2

62

PLANDALE S.M.A.

DRAWING No Page 2 of 2

A1 - 854364 Sht 1

USED ON

Grid	IC	Description	Grid	IC	Description	Grid	IC	Description	Grid	IC	Description
A5	55	74HCT153 +5V-16,0V-8	E1	29	74F574 +5V-20, 0V-10				L1	67	74HCT153 +5V-16,0V-8
			E2	28	74F574 +5V-20, 0V-10	H1	31	74F04 +5V-14, 0V-7	L2	66	853491 27S33 +5V-18,0V-9
B1	2	74F541 +5V-20, 0V-10	E3	19	2149-35 +5V-18, 0V-9	H2	10	74HCT174 +5V-16,0V-8	L3a	48	74HCT574 +5V-20, 0V-10
B2	1	74F541 +5V-20, 0V-10	E4	21	2149-35 +5V-18, 0V-9	H3	39	74F525 +5V-28,0V-14	L3b	71	74F04 +5V-14, 0V-7
B3a	7	74F574 +5V-20, 0V-10	E5	53	74AS867 +5V-24, 0V-12	H4	58	74F574 +5V-20, 0V-10	L4	52	853909 P105A +5V-28,0V-14
B3b	34	74F04 +5V-14, 0V-7	E7	64	74F574 +5V-20, 0V-10	H5	50	2149-35 +5V-18, 0V-9	L5	72	74F244 +5V-20, 0V-10
B4	14	74F74 +5V-14 0V-7				H6	36	853489 16L8A +5V-20,0V-10	L6	77	74F08 +5V-14, 0V-7
B5	54	74AS867 +5V-24 0V-12				H7	33	74F163 +5V-16, 0V-8	L7	70	854461 16R4D +5V-20,0V-10
B6	61	853496 2716 +5V-24, 0V-12	F1	27	74HCT541+5V-20, 0V-10						
B7	63	74F574 +5V-20 0V-10	F2	26	74HCT541+5V-20 0V-10	J1a	11	74HCT574 +5V-20, 0V-10	M5	37	74F86 +5V-14, 0V-7
			F3	25	74S 244 +5V-20 0V- 10	J1b	46	74HCT574 +5V-20, 0V-10			
			F4	81	74F74 +5V-14 0V-7	J2a	9	74HCT574 +5V-20, 0V-10			
C1	35	74F244 +5V-20, 0V-10	F5	56	853494 2764 +5V-24, 0V-12	J2b	47	74HCT574 +5V-20, 0V-10			
C2	8	854391 20L10A +5V-24, 0V-12	F6	38	74F541 +5V-20, 0V-10	J3a	82	74HCT74 5V-14, 0V-7.			
C3	16	74F574 +5V-20, 0V-10	F7	43	74F574 +5V-20, 0V-10	J3b	75	74F74 +5V-14, 0V-7			
C4	80	74F74 +5V-14, 0V-7				J4a	3	74HCT574 +5V-20, 0V-10			
C5	57	853497 2764 +5V-28, 0V-14				J4b	5	74HCT574 +5V-20, 0V-10			
C6	60	853495 27128A +5V-28, 0V-14				J5a	4	74HCT574 +5V-20 0V-10			
C7	62	74F574 +5V-20, 0V-10	G1	22	74AS867 +5V-24, 0V-12	J5b	6	74HCT574 +5V-20, 0V-10			
			G2	23	74AS867 +5V-24, 0V-12	J7	32	74F163 +5V-16, 0V-8			
D1	30	74F574 +5V-20, 0V-10	G3	24	74AS867 +5V-24, 0V-12						
D2	17	2149-35 +5V-18, 0V-9	G4	45	74HCT593 +5V-20, 0V-10						
D3a	18	2149-35 +5V-18, 0V-9	G5	49	AM 29821 +5V-24,0V-12	K1	69	853492 P105A +5V-28,0V-14			
D3b	20	2149-35 +5V-18 0V-9				K2	68	853493 P105A +5V-28,0V-14			
D4	15	853488 20U8B +5V-24, 0V-12	G7	42	74F540 +5V-20, 0V-10						
D5	59	74HCT574 +5V-20, 0V-10				K4	76	74HCT74 +5V-14,0V-7			
D6	40	74F574 +5V-20, 0V-10				K5	51	2149-35 +5V-18, 0V-9			
D7	65	74F574 +5V-20, 0V-10									

© CAMBRIDGE INSTRUMENTS LIMITED 1986.
THIS DRAWING IS THE PROPERTY OF THE CAMBRIDGE INSTRUMENT CO. LTD. GROUP OF COMPANIES WHICH INCLUDE CAMBRIDGE INSTRUMENTS LTD., U.S.A., CAMBRIDGE INSTRUMENTS GmbH WEST GERMANY, CAMBRIDGE INSTRUMENTS SARL FRANCE CAMBRIDGE INSTRUMENTS INC. U.S.A. THIS DRAWING SHALL NOT BE COPIED OR REPRODUCED IN ANY FORM TO THIRD PERSONS WITHOUT WRITTEN PERMISSION FROM CAMBRIDGE INSTRUMENTS LIMITED.
IN THE U.S.A. THIS DRAWING IS LOANED WITH THE EXPRESSED AGREEMENT THAT THE DRAWING AND INFORMATION THEREIN CONTAINED ARE THE PROPERTY OF CAMBRIDGE INSTRUMENTS INC. AND WILL NOT BE REPRODUCED, COPIED, OR OTHERWISE DISPOSED OF DIRECTLY, AND WILL NOT BE USED IN WHOLE OR IN PART TO ASSIST IN MAKING OR TO FURNISH ANY INFORMATION FOR THE MAKING OF DRAWINGS OR PRINTS OR OTHER REPRODUCTIONS THEREOF OR FOR THE MAKING OF APPARATUS OR PARTS THEREOF EXCEPT UPON WRITTEN PERMISSION OF CAMBRIDGE INSTRUMENTS INC. FIRST OBTAINED SPECIFIC AS TO EACH CASE. THE ACCEPTANCE OF THIS DRAWING WILL BE CONSTRUED AS AN ACCEPTANCE OF

LAST COMPONENT REF No
USED
R C L
T I/C

| | | | | | | | | |

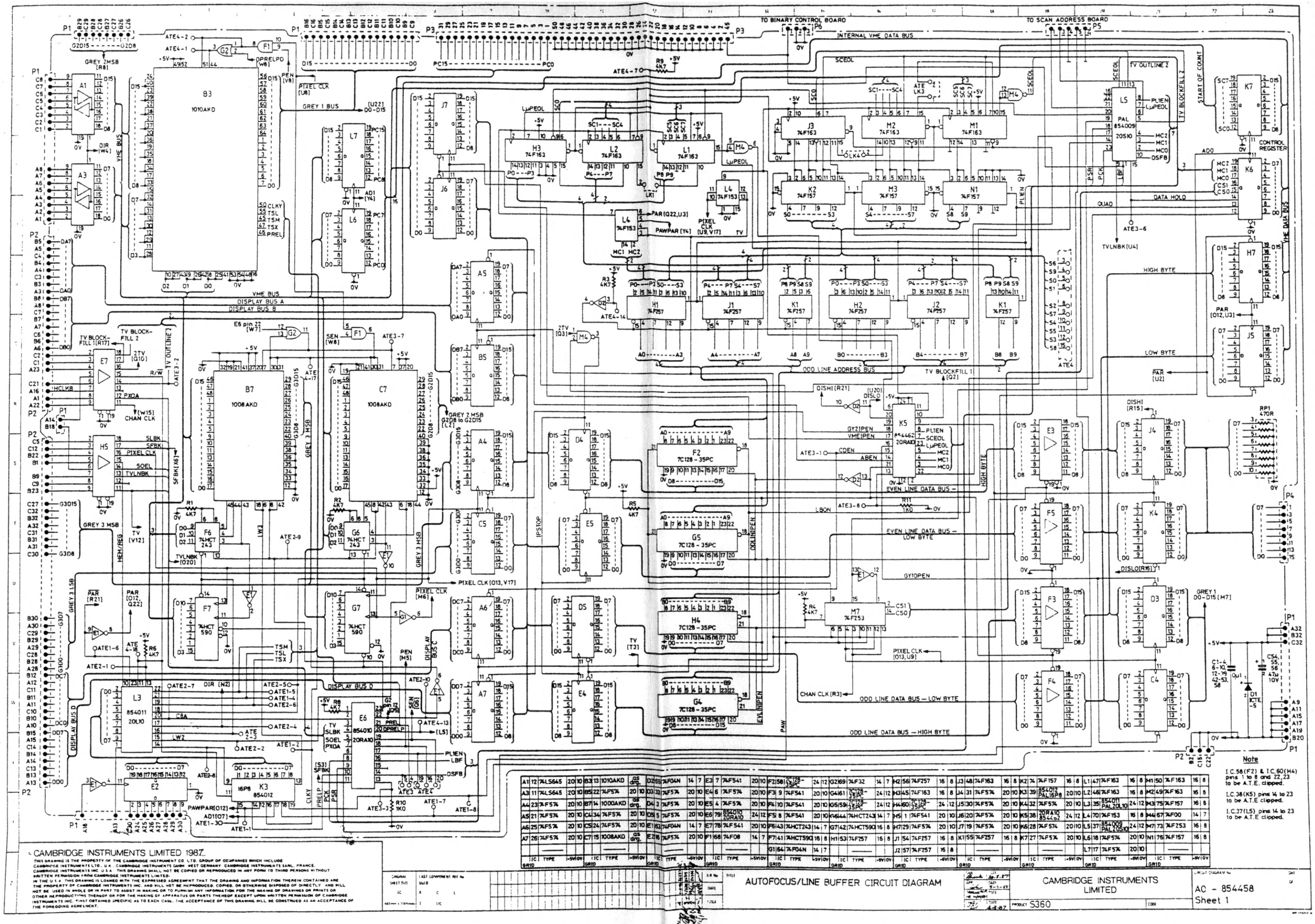

© CAMBRIDGE INSTRUMENTS LIMITED 1987.
THIS DRAWING IS THE PROPERTY OF THE CAMBRIDGE INSTRUMENT CO. LTD. GROUP OF COMPANIES WHICH INCLUDE CAMBRIDGE INSTRUMENTS LTD., U.K. CAMBRIDGE INSTRUMENTS GMBH WEST GERMANY CAMBRIDGE INSTRUMENTS SARL, FRANCE. CAMBRIDGE INSTRUMENTS INC U.S.A. THIS DRAWING SHALL NOT BE COPIED OR REPRODUCED IN ANY FORM TO THIRD PERSONS WITHOUT WRITTEN PERMISSION FROM CAMBRIDGE INSTRUMENTS LIMITED.
IN THE U.S.A. THIS DRAWING IS LOANED WITH THE EXPRESSED AGREEMENT THAT THE DRAWING AND INFORMATION THEREIN CONTAINED ARE THE PROPERTY OF CAMBRIDGE INSTRUMENTS INC. AND WILL NOT BE REPRODUCED, COPIED, OR OTHERWISE DISPOSED OF DIRECTLY AND WILL NOT BE USED IN WHOLE OR IN PART TO ASSIST IN MAKING OR TO FURNISH ANY INFORMATION FOR THE MAKING OF DRAWINGS OR PRINTS OR OTHER REPRODUCTIONS THEREOF OR FOR THE MAKING OF APPARATUS OR PARTS THEREOF EXCEPT UPON WRITTEN PERMISSION OF CAMBRIDGE INSTRUMENTS INC. FIRST OBTAINED SPECIFIC AS TO EACH CASE. THE ACCEPTANCE OF THIS DRAWING WILL BE CONSTRUED AS AN ACCEPTANCE OF THE FOREGOING AGREEMENT.

Note

I.C.58(F2) & I.C.60(H4) pins 1 to 8 and 22,23 to be A.T.E. clipped.

I.C.38(K5) pins 14 to 23 to be A.T.E. clipped.

I.C.37(L5) pins 14 to 23 to be A.T.E. clipped.

	IC TYPE	GRID	-5V/0V	IC TYPE	GRID	-5V/0V	IC	IC TYPE	GRID	-5V/0V	IC TYPE	GRID	-5V/0V	IC TYPE	GRID	-5V/0V	IC TYPE	GRID	-5V/0V	IC TYPE	GRID	-5V/0V	IC TYPE	GRID	-5V/0V	IC TYPE	GRID	-5V/0V	IC TYPE	GRID	-5V/0V
A1	74LS645	12	20	B3	1010AKD	gs drg.	D2	65	74F04N	14	7	E3	74F541	20	10	F2	58	7C128-35PC	24	12	G2	69	74F32	14	7	K2	56	74F257	16	8	J3	48	74F163	16	8	K2	74	74F157	16	8	L1	47	74F163	16	8	M1	50	74F163	16	8
A3	11	74LS645	20	10	B5	22	74F574	20	10	D3	33	74F574	20	10	E4	6	74F574	20	10	F3	9	74F541	20	10	G4	61	7C128-35PC	24	12	H3	45	74F163	16	8	J4	31	74F574	20	10	K3	39	854012 PAL16P8	20	10	L2	46	74F163	16	8	M2	49	74F163	16	8
A4	23	74F574	20	10	B7	14	1000AKD	gs drg.	D4	3	74F574	20	10	E5	4	74F574	20	10	F4	10	74F541	20	10	G5	59	7C128-35PC	24	12	H4	60	7C128-35PC	24	12	J5	30	74F574	20	10	K4	32	74F574	20	10	L3	35	854011 PAL 20L10	24	12	M3	75	74F157	16	8
A5	21	74F574	20	10	C4	34	74F574	20	10	D5	5	74F574	20	10	E6	79	854010 20RA10	24	12	F5	8	74F541	20	10	K6	44	74HCT243	14	7	H5	1	74F541	20	10	J6	20	74F574	20	10	K5	38	20RA10 854402	24	12	L4	70	74F153	16	8	M4	67	74F00	14	7
A6	25	74F574	20	10	C5	24	74F574	20	10	E1	63	74F04N	14	7	E7	78	74F541	20	10	F6	43	74HCT243	14	7	G7	42	74HCT590	16	8	H7	29	74F574	20	10	J7	19	74F574	20	10	K6	28	74F574	20	10	L5	37	854009 PAL 20L10	24	12	M7	73	74F253	16	8
A7	26	74F574	20	10	C7	15	1008AKD	gs drg.	E2	16	74F574	20	10	F1	68	74F08	14	7	F7	41	74HCT590	16	8	H1	53	74F257	16	8	J1	54	74F257	16	8	K1	55	74F257	16	8	K7	27	74F574	20	10	L6	18	74F574	20	10	N1	75	74F157	16	8
																	G1	64	74F04N	14	7									J2	57	74F257	16	8									L7	17	74F574	20	10						

DRAWING No A1 853420 SHT 1

USED ON 713907

	1	2	3	4	5	6	7	8
A						IC54 74HCT14 0V-7 +5V-14	IC 52 74HCT74 0V-7 +5V-14	IC 53 74HCT74 0V-7 +5V-14
B	IC 4 74LS245 0V-10 +5V-20	IC 5 74LS245 0V-10 +5V-20	IC 2 74HCT244 0V-10 +5V-20	IC1 74HCT244 0V-10 +5V-20	IC 3 74HCT244 0V-10 +5V-20	IC 51 74HC30 0V-7 +5V-14		IC 17 853499 0V-10 +5V-20
C						IC9 74HCT163 0V-8 +5V-16		IC 26 853659 0V-10 +5V-20
D	IC 33 75LS245 0V-10 +5V-20	IC 34 75LS245 0V-10 +5V-20	IC 7 74HCT244 0V-10 +5V-20	IC 21 AM 2149 35 0V-9 +5V-18	IC 6 74 LS 244 0V-10 +5V-20	IC 11 74HC164 0V-7 +5V-14	IC 12 74HC164 0V-7 +5V-14	
E	IC 35 74LS245 0V-10 +5V-20	IC 36 74LS245 0V-10 +5V-20	IC10 853498 0V-10 +5V-20	IC 20 AM2149 35 0V-9 +5V-18	IC 42 74LS244 0V-10 +5V-20	IC 29 74HC08 0V-7 +5V-14	IC 30 74HCT14 0V-7 +5V-14	IC 32 74HCT 32 0V-7 +5V-14
F		IC 16 74HC 138 0V-8 +5V-16	IC 8 74HCT00 0V-7 +5V-14	IC 22 AM 2149 35 0V-9 +5V-18	IC 43 74LS244 0V-10 +5V-20	IC 47 74ALS574 0V-10 +5V-20	IC 14 74HCT74 0V-7 +5V-14	IC 15 74HCT74 0V-7 +5V-14
G		IC 48 74ALS574 0V-10 +5V-20	IC 45 74ALS574 0V-10 +5V-20	IC 23 AM 2149 35 0V-9 +5V-18	IC 44 74ALS574 0V-10 +5V-20			
H		IC 13 74HCT02 0V-7 +5V-14	IC 27 74HCT74 0V-7 +5V-14	IC 18 853500 0V-10 +5V-20	IC 24 853660 0V-10 +5V-20			
J		(a) IC 25 74HC08 0V-7 +5V-14 (b) IC 58 74HCU04 0V-7, 5V-14	(a) IC 28 74HCT74 0V-7, +5V-14 (b) IC 57 DS1488 0V-7 +12V-14, -12V-1		IC 38 MC68B21 0V-1 +5V-20			IC 37 MC68B21 0V-1 +5V-20
K		IC55 6551 0V-1 +5V-15	IC56 MC 1489 0V-7 +5V-14		IC 40 MC 68B21 0V-1 +5V-20			IC 39 MC 68B21 0V-1 +5V-20
L			IC41 6551 0V-1 +5V-15					IC 46 6522A 0V-1 +5V-20

© CAMBRIDGE INSTRUMENTS LIMITED 1986.
THIS DRAWING IS THE PROPERTY OF THE CAMBRIDGE INSTRUMENT CO. LTD. GROUP OF COMPANIES WHICH INCLUDE CAMBRIDGE INSTRUMENTS LTD. U.K. CAMBRIDGE INSTRUMENTS GMBH. WEST GERMANY. CAMBRIDGE INSTRUMENTS SARL. FRANCE CAMBRIDGE INSTRUMENTS INC U.S.A. THIS DRAWING SHALL NOT BE COPIED OR REPRODUCED IN ANY FORM TO THIRD PERSONS WITHOUT WRITTEN PERMISSION FROM CAMBRIDGE INSTRUMENTS LIMITED.
IN THE U.S.A. THIS DRAWING IS LOANED WITH THE EXPRESSED AGREEMENT THAT THE DRAWING AND INFORMATION THEREIN CONTAINED ARE THE PROPERTY OF CAMBRIDGE INSTRUMENTS INC. AND WILL NOT BE REPRODUCED, COPIED, OR OTHERWISE DISPOSED OF DIRECTLY, AND WILL NOT BE USED IN WHOLE OR IN PART TO ASSIST IN MAKING OR TO FURNISH ANY INFORMATION FOR THE MAKING OF DRAWINGS OR PRINTS OR OTHER REPRODUCTIONS THEREOF OR FOR THE MAKING OF APPARATUS OR PARTS THEREOF EXCEPT UPON WRITTEN PERMISSION OF CAMBRIDGE INSTRUMENTS INC. FIRST OBTAINED SPECIFIC AS TO EACH CASE. THE ACCEPTANCE OF THIS DRAWING WILL BE CONSTRUED AS AN ACCEPTANCE OF THE FOREGOING AGREEMENT.

LAST COMPONENT REF No USED

R C L

IC

ISSUE	DATE	INITIAL
4	26/4/87	
3	26/4/87	
2	15/5/86	
1	23/3/86	

UNLESS OTHERWISE STATED ALL RESISTORS ARE ¼ WATT ... TOLERANCED

TITLE

VME CRATE INTERFACE
CIRCUIT DIAGRAM

DRN	DATE 18-9-85	CAMBRIDGE INSTRUMENTS LIMITED
APP MD	DATE 23/9/86	
TRACED	DATE	
CHKD MR	DATE 14/8/86	PRODUCT S360 CODE

CIRCUIT DIAGRAM No A1 853420 Sht 1 page 2 of 2

SHT 2 OF 2

66

A0 - 855162
SHEET 1 PAGE 1 OF 3

PL1
EXPANSION BUS

PL5
RS232 TO 68K

PL6
RS232 TO EDX

PL4
LCD CONTROL

POWER
PL9

PL2
PANEL KEYS

PL3
KEYBOARD

SUPPLIES

INPUT+12V
INPUT0V
INPUT+5V
INPUT-12V

Z80 PROCESSOR

KEYBOARD INTERFACE

PAGE2

MEMORY

ADDRESS DECODER

PAGE3

INTERRUPT PRIORITY

68K RS 232
EDX RS232

LCD CONTROL

68K PORT

LED CONTROL
BAUD RATE CONTROL

DIGIKNOBS
TRACKER BALL

JOYSTICK ADC

PC10
68K COMMUNICATIONS

PA10
68K COMMUNICATIONS

PL11
LED CONTROL

PL7
DIGIKNOBS 1 & 2

PL8
DIGIKNOBS 3 & 4

PL15
TRACKER BALL

PL12
JOYSTICK PORT 1

PL13
JOYSTICK PORT 2

PL14
JOYSTICK PORT 3

© CAMBRIDGE INSTRUMENTS 1987, 1989

THIS DRAWING IS THE PROPERTY OF THE CAMBRIDGE INSTRUMENT CO. LTD. WHICH INCLUDES CAMBRIDGE INSTRUMENTS LTD., U.K., CAMBRIDGE INSTRUMENTS GMBH, WEST GERMANY, CAMBRIDGE INSTRUMENTS SARL, FRANCE, AND CAMBRIDGE INSTRUMENTS INC., U.S.A. THIS DRAWING SHALL NOT BE COPIED OR REPRODUCED IN ANY FORM OR PARTS THEREOF WITHOUT WRITTEN PERMISSION FROM CAMBRIDGE INSTRUMENTS LIMITED.
IN THE U.S.A., THIS DRAWING IS LOANED WITH THE EXPRESSED AGREEMENT THAT THE DRAWING AND INFORMATION THEREIN CONTAINED ARE THE PROPERTY OF CAMBRIDGE INSTRUMENTS INC. AND SHALL NOT BE REPRODUCED, COPIED, OR OTHERWISE DISPOSED OF DIRECTLY, AND WILL NOT BE USED IN WHOLE OR IN PART TO ASSIST IN MAKING OR TO FURNISH ANY INFORMATION FOR THE MAKING OF DRAWINGS OR PRINTS OR OTHER REPRODUCTIONS THEREOF OR FOR THE MAKING OF APPARATUS OR PARTS THEREOF EXCEPT UPON WRITTEN PERMISSION OF CAMBRIDGE INSTRUMENTS INC. FIRST OBTAINED SPECIFIC IN EACH CASE. THE ACCEPTANCE OF THIS DRAWING WILL BE CONSTRUED AS AN ACCEPTANCE OF THE FOREGOING AGREEMENT.

DRN	J.M.G.		
CHKD			
APP			
PCA			
PED			
DATE	30.3.90	14-12-89	15-11-89
ISSUE	24	2	1
MOD NO	40304	26060	INITIAL

TITLE
S360 USER INTERFACE
CIRCUIT DIAGRAM

WARNING: CAD PRODUCED CIRCUIT DO NOT HAND MODIFY

		DATE
DRN	R.H.WARD	25/3/87
CHKD	J.ROSE	
APP	T.NASON	
PCA	J.L.TOWELL	
PED	K.WOLFE	

CAMBRIDGE INSTRUMENTS LIMITED

CIRCUIT DIAGRAM No.
A0 - 855162
SHEET : PAGE 1 OF 3

PLAINDALE S.M.A.

CIRCUIT DIAGRAM No.
A0 - 855162
SHEET 1 PAGE 2 OF 3

PROCESSOR

ADDRESS DECODER

KEYBOARD INTERFACE

IC SUPPLIES AS ABOVE OR AS OTHERWISE SHOWN

© CAMBRIDGE INSTRUMENTS 1987, 1989

THIS DRAWING IS THE PROPERTY OF THE CAMBRIDGE INSTRUMENT CO. LTD. WHICH INCLUDES CAMBRIDGE INSTRUMENTS LTD., U.K., CAMBRIDGE INSTRUMENTS GMBH, WEST GERMANY, CAMBRIDGE INSTRUMENTS SARL, FRANCE, AND CAMBRIDGE INSTRUMENTS INC., U.S.A. THIS DRAWING SHALL NOT BE COPIED OR REPRODUCED IN ANY FORM TO THIRD PERSONS WITHOUT WRITTEN PERMISSION FROM CAMBRIDGE INSTRUMENTS LIMITED.
IN THE U.S.A., THIS DRAWING IS LOANED WITH THE EXPRESSED AGREEMENT THAT THE DRAWING AND INFORMATION THEREIN CONTAINED ARE THE PROPERTY OF CAMBRIDGE INSTRUMENTS INC. AND WILL NOT BE REPRODUCED, COPIED, OR OTHERWISE DISPOSED OF DIRECTLY, AND WILL NOT BE USED IN WHOLE OR IN PART TO ASSIST IN MAKING OR TO FURNISH ANY INFORMATION FOR THE MAKING OF DRAWINGS OR PRINTS OR OTHER REPRODUCTIONS THEREOF OR FOR THE MAKING OF APPARATUS OR PARTS THEREOF EXCEPT UPON WRITTEN PERMISSION OF CAMBRIDGE INSTRUMENTS INC. / UNLESS OTHERWISE SPECIFIC AS TO EACH CASE. THE ACCEPTANCE OF THIS DRAWING WILL BE CONSTRUED AS AN ACCEPTANCE OF THE FOREGOING AGREEMENT.

		J.W.G.	DRN
			CHKD
			APP
			PCA
			PED
30.3.90	11+12-89	15-11-88	DATE
A0364	25060	INITIAL	MOD NO
2a	2	1	ISSUE

TITLE
S360 USER INTERFACE
CIRCUIT DIAGRAM

WARNING: CAD PRODUCED CIRCUIT DO NOT HAND MODIFY

	DATE
DRN R.H.WARD	25/3/87
CHKD J.ROSE	
APP T.NASON	
PCA J.TOWELL	
PED M.WOLFE	

CAMBRIDGE INSTRUMENTS LIMITED

CIRCUIT DIAGRAM No.
A0 - 855162
SHEET 1 PAGE 2 OF 3

AO - 855162
SHEET 1 PAGE 3 OF 3

PANEL L.E.D. CONTROL

LED CONTROL

68K AND EDX RS232 PORTS

IC20 & IC30 SUPPLIES

PIN14 +12V
PIN 1 -12V
PIN 7 0V0

RS232 TO 68K

RS232 TO EDX

68000 PARALLEL I/F

INTERRUPT PRIORITY

DIGIKNOB AND TRACKER BALL I/F

JOYSTICK PORT 1

JOYSTICK PORT 2

JOYSTICK PORT 3

TRACKER BALL

LCD CONTRACT

ADJUST RV1 FOR DATA 7FH FROM ADC WITH JOYSTICK CENTRED

VRPOS=+9V +/-7%
VRNEG=-9V +/-5%

DELAY>=1.4MS

IC SUPPLIES AS ABOVE OR AS OTHERWISE SHOWN

RESISTORS MRS25 0.6W 1% TYPE UNLESS OTHERWISE STATED

IC27 LED WRITE WAVEFORMS

IC40 WAVEFORMS, INTERRUPT ACKNOWLEDGE

© CAMBRIDGE INSTRUMENTS 1987, 1989

THIS DRAWING IS THE PROPERTY OF THE CAMBRIDGE INSTRUMENT CO. LTD. WHICH INCLUDES CAMBRIDGE INSTRUMENTS LTD., U.K.; CAMBRIDGE INSTRUMENTS GMBH, WEST GERMANY; CAMBRIDGE INSTRUMENTS SARL, FRANCE; AND CAMBRIDGE INSTRUMENTS INC, U.S.A. THIS DRAWING SHALL NOT BE COPIED OR REPRODUCED IN ANY FORM TO THOSE PERSONS WITHOUT WRITTEN PERMISSION FROM CAMBRIDGE INSTRUMENTS LIMITED.
IN THE U.S.A., THIS DRAWING IS LOANED WITH THE EXPRESSED AGREEMENT THAT THE DRAWING AND INFORMATION THEREIN CONTAINED ARE THE PROPERTY OF CAMBRIDGE INSTRUMENTS INC. AND WILL NOT BE REPRODUCED, COPIED, OR OTHERWISE DISPOSED OF DIRECTLY, AND WILL NOT BE USED IN WHOLE OR IN PART TO ASSIST IN MAKING OR TO FURNISH ANY INFORMATION FOR THE MAKING OF DRAWINGS OR PRINTS OR OTHER REPRODUCTIONS THEREOF OR FOR THE MAKING OF APPARATUS OR PARTS THEREOF EXCEPT UPON WRITTEN PERMISSION OF CAMBRIDGE INSTRUMENTS INC. FIRMS OBTAINED SPECIFIC AS TO EACH CASE. THE ACCEPTANCE OF THIS DRAWING WILL BE CONSTRUED AS AN ACCEPTANCE OF THE FOREGOING AGREEMENT.

JDW		J.W.G.	DRN
JDW			CHKD
AJTS			APP
MH			PCA
MK			MED
30.3.88	14-12-88	15-11-88	DATE
40304	29060	INITIAL	MOD NO
3A	2	1	ISSUE

TITLE
S360 USER INTERFACE
CIRCUIT DIAGRAM

WARNING: CAD PRODUCED CIRCUIT DO NOT HAND MODIFY

	DATE
DRN D.CAIRNS	25-3-87
CHKD J.HOSE	
APP T.MASON	
PCA J.TOWELL	
MED M.ROLFE	

CAMBRIDGE INSTRUMENTS LIMITED

CIRCUIT DIAGRAM No.
AO - 855162
SHEET 1 PAGE 3 OF 3

PLANDALE S.M.A.

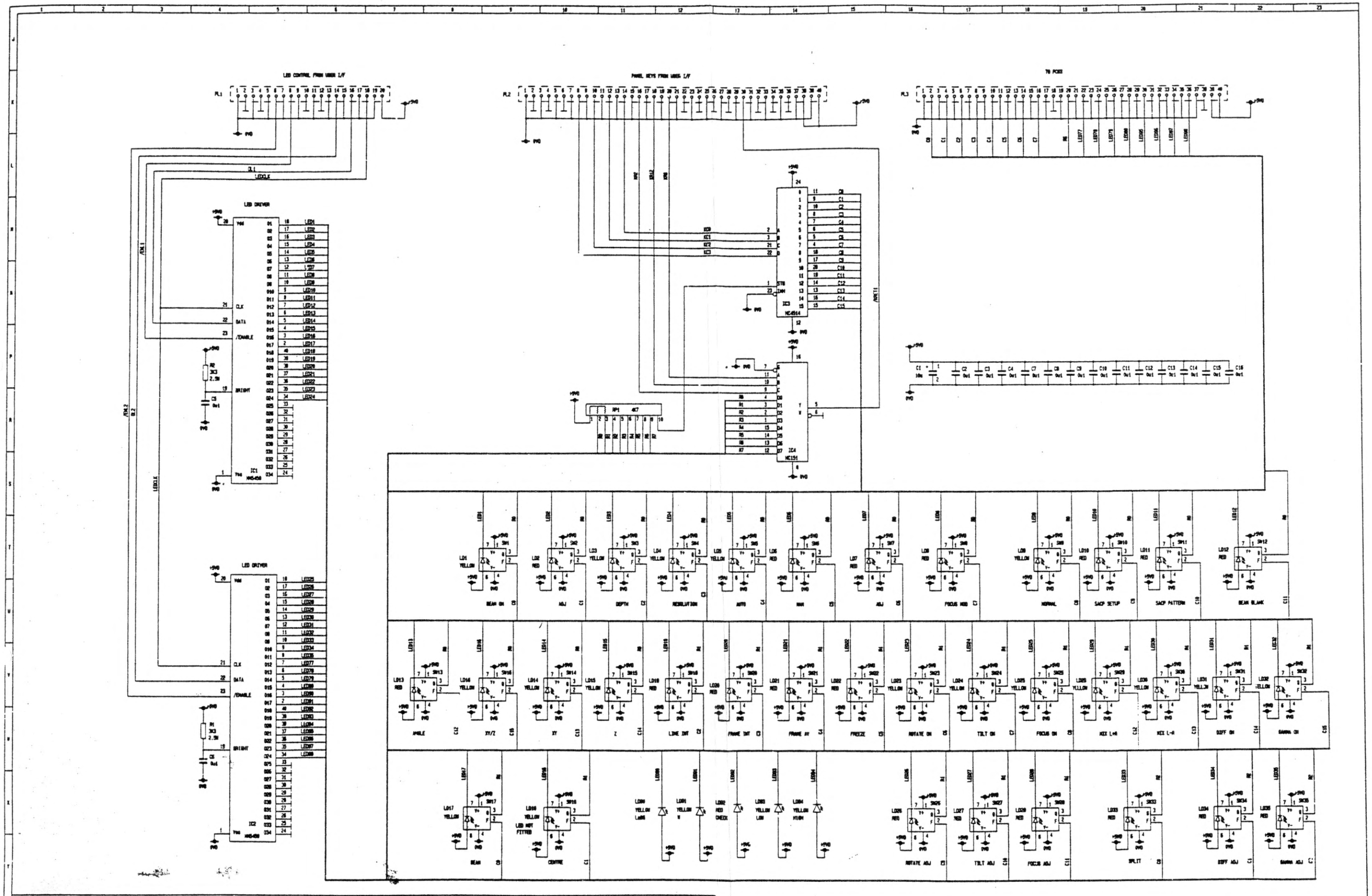

© CAMBRIDGE INSTRUMENTS LIMITED 1986

WARNING : CAD PRODUCED CIRCUIT DO NOT HAND MODIFY

P.R.S.	C.L.R	T. R.	DRN
	R.N.B.	S CALDWS	CHKD
W	A.J.	T.W.B	APP
+/-	S.K.H.	S K H	PCA
23-10-86	30-10-87	15-12-86	DATE
26286	23430	INITIAL	MOD NO
3	2	1	ISSUE

TITLE

S360 CONTROL PANEL PCB1

CIRCUIT DIAGRAM

		DATE
DRN	T MASON	05-10-86
CHKD	S CALDWS	19-12-86
APP	T MASON	22-12-86
PCA	S K H	19-12-86
PED 6	DRAWING	22-12-86

CAMBRIDGE INSTRUMENTS LIMITED

CIRCUIT DIAGRAM No.

A0 - 853644

SHEET 1

PAGE: 1

OF: 1

A BLICK PRODUCT

70

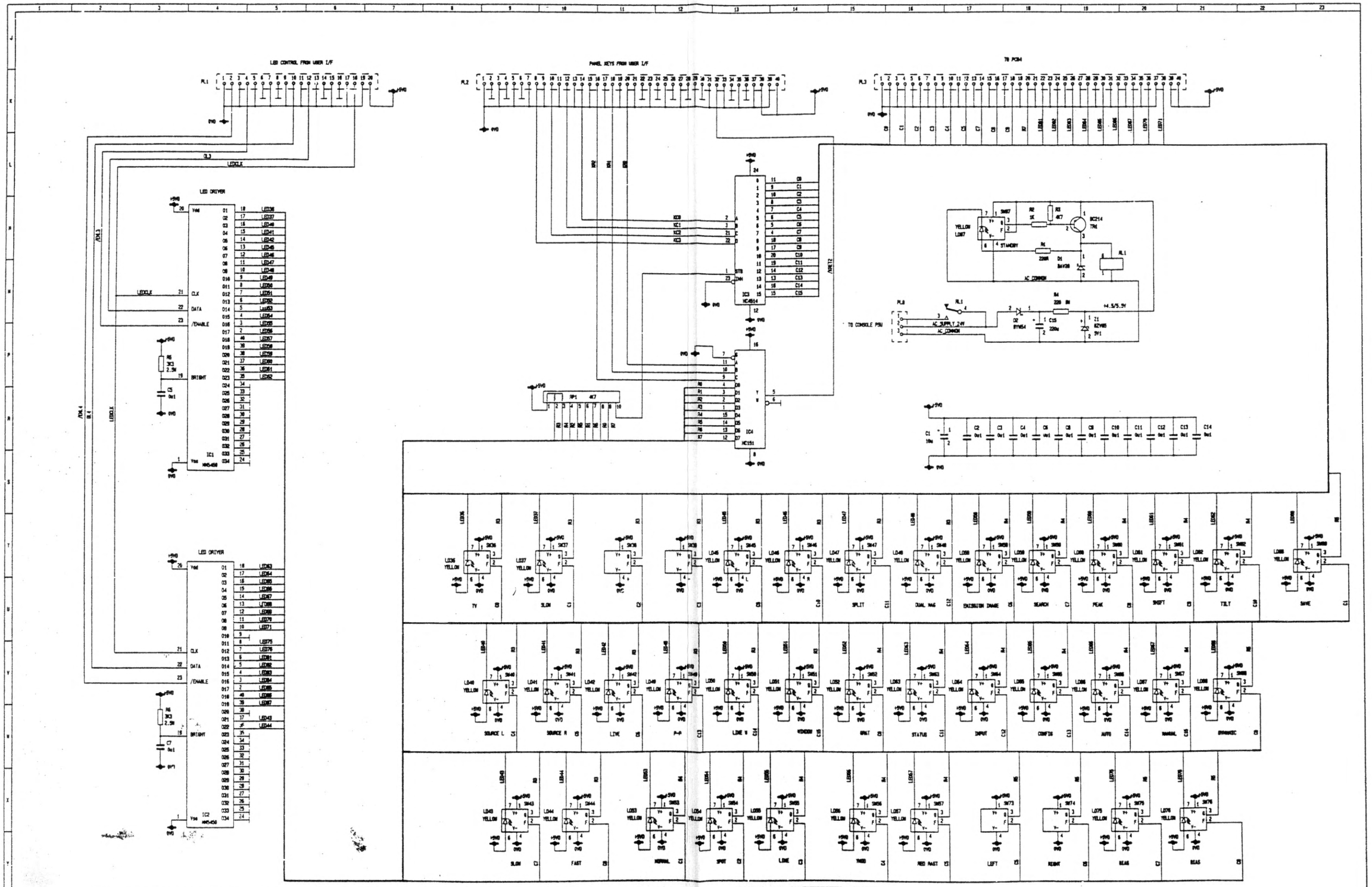

© CAMBRIDGE INSTRUMENTS LIMITED 1986

WARNING : CAD PRODUCED CIRCUIT DO NOT HAND MODIFY

ALL RESISTORS ARE 0.6W IS UNLESS OTHERWISE STATED

C.L.R	T MASON	DRN
[illegible]	D CAIRNS	CHKD
A-3	T MASON	APP
[illegible]	S K H	PCA
30-10-87	10-12-86	DATE
23400	INITIAL	MOD NO
2	1	ISSUE

TITLE

S360 CONTROL PANEL PCB2

CIRCUIT DIAGRAM

		DATE
DRN	T MASON	10-12-86
CHKD	D CAIRNS	10-12-86
APP	T MASON	20-12-86
PCA	S K H	10-12-86
PED	R ROLFE	20-12-86

CAMBRIDGE INSTRUMENTS LIMITED

CIRCUIT DIAGRAM No. A0 - 853646

SHEET 1 PAGE: 1 OF: 1

71

LCD CONTROL FROM USER I/F

PL1

D0C
D1C
D2C
D3C
D4C
D5C
D6C
D7C
/A0b
R/W
E1
0VD
+5VD

PL8
14W JUMPER

+5V
GND
/A0b
CONTRAST
E1
R/W
D1C
D0C
D3C
D2C
D5C
D4C
D7C
D6C

LCD DISPLAY

Vcc
DB0
DB1
DB2
DB3
DB4
DB5
DB6
DB7
RS
R/W
E
Vo
Vss
LCD1
6288
LAMP
LAMP

R1
1K0
RV1
20k
ATE1

ADJUST FOR MAXIMUM CONTRAST
WHEN VIEWED AT AN ANGLE OF
45 DEGREES BELOW CENTRE OF
DISPLAY

SP2
SP1

IC1
OAS 5V3
Vi
Vo
COM
L1
100uH
C5
100u

IC1 OUTPUT AT
100Vp.c 500Hz

PL6

PL3

DK1A
DK1B
DK2A
DK2B

DIGIDIAL DK1 INPUT

DIGIDIAL DK2 INPUT

DIGIDIALS TO USER I/F

PL7

PANEL KEYS TO PCB 3

PL2

C0
C1
C2
C3
B6
LED80
LED79
LED77
LED78
LED95
LED96

STAGE LIN
BEAM LIN
RED
LED95
LED96
SW77
SW78
SW79
SW80
LED77
LED78
LED79
LED80
COARSE
FINE
YELLOW

C1 0u1
C2 0u1
C3 0u1
C4 0u1
C5 0u1

PL4

JOYSTICK TO USER I/F

PL5

JOYSTICK INPUT

BLUE
BLACK (-0V)
GREEN (COM)
YELLOW
RED (+8V)

© CAMBRIDGE INSTRUMENTS LIMITED 1986

WARNING : CAD PRODUCED CIRCUIT DO NOT HAND MODIFY

TITLE
S360 CONTROL PANEL PCB3
CIRCUIT DIAGRAM

CAMBRIDGE INSTRUMENTS
LIMITED

A1 - 853648

PAGE 1
SHT: 1
DP: 1

72

LCD CONTROL FROM USER I/F

PL1

D0C
D1C
D2C
D3C
D4C
D5C
D6C
D7C
RS
R/W
E2

0VD
+5VD

PL8
14W JUMPER

RS
E2
R/W
D1C
D0C
D3C
D2C
D5C
D4C
D7C
D6C
CONTRAST

R1
1K0
RV1
20k
ATE1

ADJUST FOR MAXIMUM CONTRAST WHEN VIEWED AT AN ANGLE OF 45 DEGREES BELOW CENTRE OF DISPLAY

LCD DISPLAY
Vcc
DB0
DB1
DB2
DB3
DB4
DB5
DB6
DB7
LAMP
LAMP
RS
R/W
E
Vo
Vss
LCD1
6288

SP2
SP1

DIGIDNOBS TO USER I/F

PL3
DK1A
DK1B
DK2A
DK2B

PL6
DIGIDNOB DK3 INPUT

PL7
DIGIDNOB DK4 INPUT

TRACKER BALL TO USER I/F

PL4
XA
XB
YA
YB

PL5
TRACKER BALL INPUT

REG1
DAS 5V3
C1 0u1
C2 0u1
C3 0u1
C4 0u1
C5 0u1
L1 100uH
C6 100u

REG1 OUTPUT AT 100Vp.c 600Hz

PANEL KEYS TO PCB 2

PL2
C0
C1
C2
C3
C4
C5
C7
C8
C9
LED81
LED82
LED83
LED84
LED86
LED87
LED70
LED71

LED NOT FITTED

AUTO COARSE
AUTO FINE
MAN COARSE
MAN FINE
SELECT
MANUAL B
MANUAL C
AUTO M
AUTO C

© CAMBRIDGE INSTRUMENTS LIMITED 1986

WARNING : CAD PRODUCED CIRCUIT DO NOT HAND MODIFY

TITLE
5360 CONTROL PANEL PCB 4
CIRCUIT DIAGRAM

CAMBRIDGE INSTRUMENTS LIMITED

A1 - 853650

PAGE 1
SHT: 1
OF: 1

A BLICK PRODUCT

73

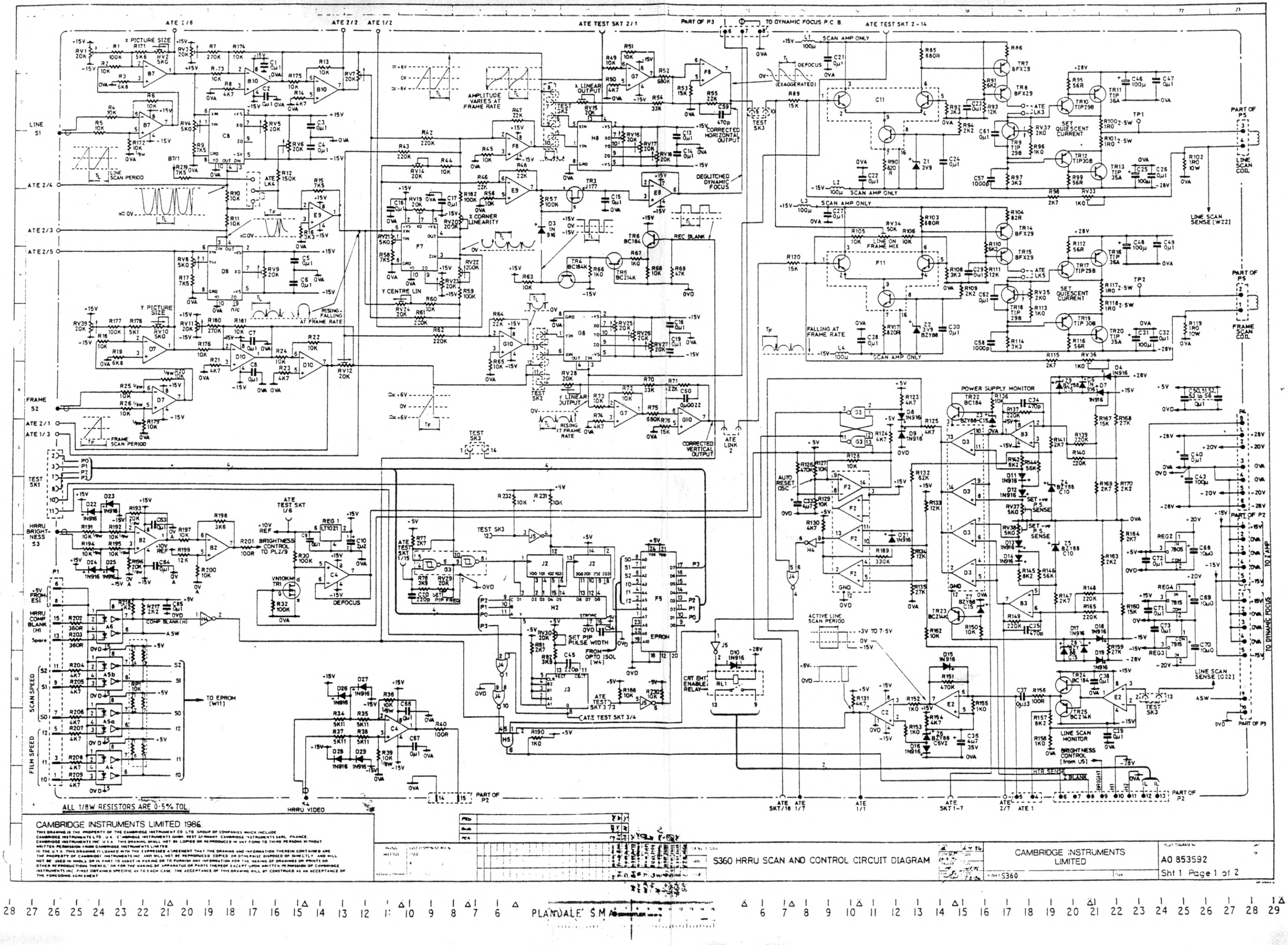

CAMBRIDGE INSTRUMENTS LIMITED 1986.
THIS DRAWING IS THE PROPERTY OF THE CAMBRIDGE INSTRUMENT CO LTD GROUP OF COMPANIES WHICH INCLUDE CAMBRIDGE INSTRUMENTS LTD U.K. CAMBRIDGE INSTRUMENTS GMBH. WEST GERMANY CAMBRIDGE INSTRUMENTS SARL FRANCE. CAMBRIDGE INSTRUMENTS INC U.S.A. THIS DRAWING SHALL NOT BE COPIED OR REPRODUCED IN ANY FORM TO THIRD PERSONS WITHOUT WRITTEN PERMISSION FROM CAMBRIDGE INSTRUMENTS LIMITED.
IN THE U.S.A. THIS DRAWING IS LOANED WITH THE EXPRESSED AGREEMENT THAT THE DRAWING AND INFORMATION THEREIN CONTAINED ARE THE PROPERTY OF CAMBRIDGE INSTRUMENTS INC AND SHALL NOT BE REPRODUCED COPIED OR OTHERWISE DISPOSED OF DIRECTLY AND SHALL NOT BE USED IN WHOLE OR IN PART TO ASSIST IN MAKING OR TO FURNISH ANY INFORMATION FOR THE MAKING OF DRAWINGS OR PRINTS OR OTHER REPRODUCTIONS THEREOF, OR FOR THE MAKING OF APPARATUS OR PARTS THEREOF EXCEPT UPON WRITTEN PERMISSION OF CAMBRIDGE INSTRUMENTS INC FIRST OBTAINED SPECIFIC AS TO EACH CASE. THE ACCEPTANCE OF THIS DRAWING SHALL BE CONSTRUED AS AN ACCEPTANCE OF THE FOREGOING AGREEMENT

S360 HRRU SCAN AND CONTROL CIRCUIT DIAGRAM

CAMBRIDGE INSTRUMENTS LIMITED

A0 853592

Sht 1 Page 1 of 2

USED ON

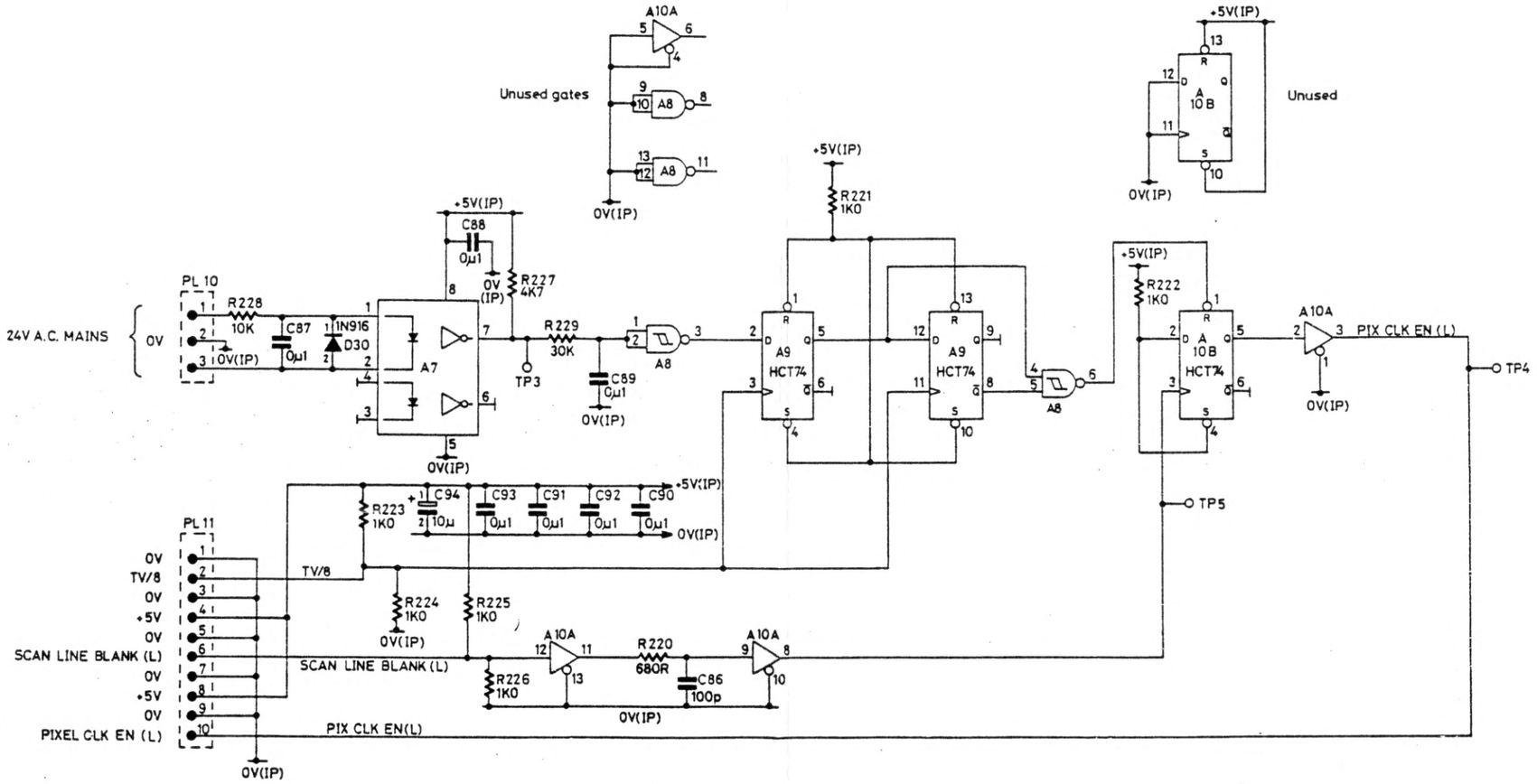

A7	HCPL 2730	0V-5, +5V-8	B2	LF 353N	+15V-8, -15V-4	C4	LF 353N	+15V-8, -15V-4	D7	LF 353N	+15_8, -15V_4	F2	MC 3302P	+15V-3, 0VD-12	G7	LF 353N	+15V-8, -15V-4	H8	AD 533J	+15V-2, -15V-5
A4	HCPL 2730	0V-5, +5V-8	B3	LF 353N	+15V-8, -15V-4	C8	AD 533J	+15V-2, -15V-5	D8	AD 533J	+15V_8, -15V_5	F5	853910	+5V_24, 0VD-12	G8	AD 533J	+15V-2, -15V-5	J2	74HC393	+5V-14, 0VD-7
A5a	HCPL 2730	0V-5, +5V-8	B7	LF 353N	+15V-8, -15V-4	C11	CA 3096AE		D10	LF 353N	+15V_8, -15V_4	F7	AD 533J	+15V_2, -15V-5	G10	LF 353N	+15V-8, -15V-4	J3	74LS122	+5V-14, 0VD-7
A5b	HCPL 2730	0V-5, +5V-8	B10	LF 353N	+15V-8, -15V-4	A10A	HC125	0V-7, +5V-14	E2	LF 353N	+15_8, _15V_4	F8	LF 353N	+15V_8, -15V-4	H2	74HC151	+5V_16, 0VD-8	J4	74HC02	+5V-14, 0VD-7
A6	HCPL 2730	0V-5, +5V-8	A9	HCT 74	0V-7, +5V-14	A10B	HCT 74	0V-7, +5V-14	E8	LF 35 N	+15V-7 -15V-4	F11	CA 3096AE		H4	74HC04	+5V-14, 0VD-7	J5	7406	+5V-14, 0VD-7
A8	HC132	0V-7, +5V-14	C2	LM 311N	+15V-8, -15V-4	D3	MC3302P	-15_3, 0V_12	E9	LF 353N	+15V_8, -15V_4	G3	74HC 132	+5V_14, 0VD_7	H5	74HC 21	+5V 14, 0VD-7			

© CAMBRIDGE INSTRUMENTS LIMITED 1987.
THIS DRAWING IS THE PROPERTY OF THE CAMBRIDGE INSTRUMENT CO LTD GROUP OF COMPANIES WHICH INCLUDE CAMBRIDGE INSTRUMENTS LTD. U.K. CAMBRIDGE INSTRUMENTS GMBH. WEST GERMANY. CAMBRIDGE INSTRUMENTS SARL. FRANCE. CAMBRIDGE INSTRUMENTS INC. U.S.A. THIS DRAWING SHALL NOT BE COPIED OR REPRODUCED IN ANY FORM TO THIRD PERSONS WITHOUT WRITTEN PERMISSION FROM CAMBRIDGE INSTRUMENTS LIMITED.
IN THE U.S.A. THIS DRAWING IS LOANED WITH THE EXPRESSED AGREEMENT THAT THE DRAWING AND INFORMATION THEREIN CONTAINED ARE THE PROPERTY OF CAMBRIDGE INSTRUMENTS INC. AND WILL NOT BE REPRODUCED, COPIED, OR OTHERWISE DISPOSED OF DIRECTLY AND WILL NOT BE USED IN WHOLE OR IN PART TO ASSIST IN MAKING OR TO FURNISH ANY INFORMATION FOR THE MAKING OF DRAWINGS OR PRINTS OR OTHER REPRODUCTIONS THEREOF OR FOR THE MAKING OF APPARATUS OR PARTS THEREOF EXCEPT UPON WRITTEN PERMISSION OF CAMBRIDGE INSTRUMENTS INC. FIRST OBTAINED SPECIFIC AS TO EACH CASE. THE ACCEPTANCE OF THIS DRAWING WILL BE CONSTRUED AS AN ACCEPTANCE OF THE FOREGOING AGREEMENT

LAST COMPONENT REF No USED

R229 [illegible] L

T [illegible] W/C

PCB	10	9	8	7	6	5	4	3	2	1											C/N No
ENG	[illegible]																				DATE
PCA	[illegible]																				ISSUE

TITLE
S360 HRRU SCAN AND CONTROL CIRCUIT DIAGRAM

DRN [illegible]	DATE 1-5-87	CAMBRIDGE INSTRUMENTS LIMITED
APP	DATE	
TRACED	DATE	
CHK'D [illegible]	DATE 5.5.87	PRODUCT S360 CODE

CIRCUIT DIAGRAM No A1 853592 SHT Sheet 1 Page 2 of 2

DRAWING No. A1 852720 SH.1

USED ON 852720 SH.4

PROJECTION

DO NOT SCALE

CRT SKT

RESISTOR ON CRT CHASSIS

DYNAMIC FOCUS (2·5KV)

N/C — R13 10K 1/2W — FOCUS G3 — GRID G2 — GRID G1 — CATHODE (K) — H2 — H1 — PL222

D2 BYW 54 — C7 0µ01 1000V — R31 33M — R16 1/2W 10K — 0V(W)

R21 2K7 1/2W.

R24 2K7 1/2W

R28 2R7 W21

H1

H2

HTR SENSE

+50V SENSE

Z BLANK

BRIGHTNESS CONTROL

I/LOCK

I/LOCK

TO SCAN AND CONTROL BOARD SKT219

+15V

R5 1K2 — R18 1K — B1 CA3183E — R3 10K — C2 0µ1 — R4 5K6 — 0V(A)

TR1 BFW 44 — TR2 BFW44 — R14 1K — C6 47p — 0V(A)

R9 10K

R2 2K7 — PL219 — VIDEO INPUT — R1 1K — 0V(A)

R20 62K — C14 15p — C10 33p — 0V(A)

TR3 BF257

D3 IN916 — D4 IN916

R6 68R — R7 68R — R8 1K5 — C5 15µ0 40V — Z1 IN823 — R11 2K2 — R15 3K9 — R19 3K9

-15V

R17 1K2 — C9 4µ7 35V — 0V(A)

C4 15µ0 40V — Z2 IN823 — R12 33K — 0V(A)

D1 BYW 54

C8 4µ7 160V — 0V(W)

D5 IN916 — R25 1K8 W22 — D8 BYW 54 — R27 220R

C11 6µ8 40V — Z4 BZX61 C39 — D7 IN916 — C12 4µ7 160V — 0V(W)

0V(A) — Z3 BZY88 C5V1 — D6 IN916

TR4 2N1893 — TR5 2N1893 — Z5 BZY88 C6V2 — D9 IN916 — 0V (A)

R22 3K3 — R23 200R W21 — R26 3K9

C13 1µ0 35V — 0V(A)

-15V — L1 100 µH

+15V — C1 0µ1 30V — 0V(A) — C3 0µ1 30V — -15V — D10 BYW54 — D11 BYW54 — OV(W)

POWER SUPPLIES FROM SCAN AND CONTROL BOARD PL219

+15V | OV(A) | -15V

POWER SUPPLIES FROM WALLIS UNIT. PL17

NOT USED | 400V | OV (400) | -100V | OV (-100) | I/LOCK | I/LOCK | NOT USED | +50V | OV (+50)

NOT USED - R29

REMOVE BURRS FROM SHARP EDGES AND CORNERS USING RAD MAX

© THE CAMBRIDGE INSTRUMENT COMPANY LTD. 19

DRN DATE	CONFIDENTIAL: This document is the property of The Cambridge Instrument Company Ltd. Its contents must not be copied or communicated to a third party without the written permission of the Company	MATERIAL	TOLERANCES UNLESS OTHERWISE STATED: DECIMAL ± FRACTIONS & WHOLE NUMBERS ± ANGULAR ±
DESIGN ENG SSL DATE 28/2/83		PROTECTIVE FINISH	DIMENSIONS IN UNLESS OTHERWISE STATED
APPROVED DATE 29 4 83			SURFACE ROUGHNESS UNLESS OTHERWISE STATED

THE CAMBRIDGE INSTRUMENT GROUP OF COMPANIES

THE CAMBRIDGE INSTRUMENT COMPANY LTD.

CAMBRIDGE ENGLAND

TITLE H.R.R.U. Z AMPLIFIER S200

SCALE

DRAWING No A1 852720 SHEET 1

P.E. PKG No		
DO	A1	
	A2	
PE	A1	
	A2	
TOOL REQ NO(S)		

AMENDMENT	INITIALS	DATE	ISSUE
Page 1&2	SSL	28.4.83	1
11285 11457	CJM	2.8.83	2
11746 11767			
11804 11814 11825			
11998, 12378	JBL	14.8.84	3
22372	TMW	26.2.87	4
23441	WCM	7-11-88	5

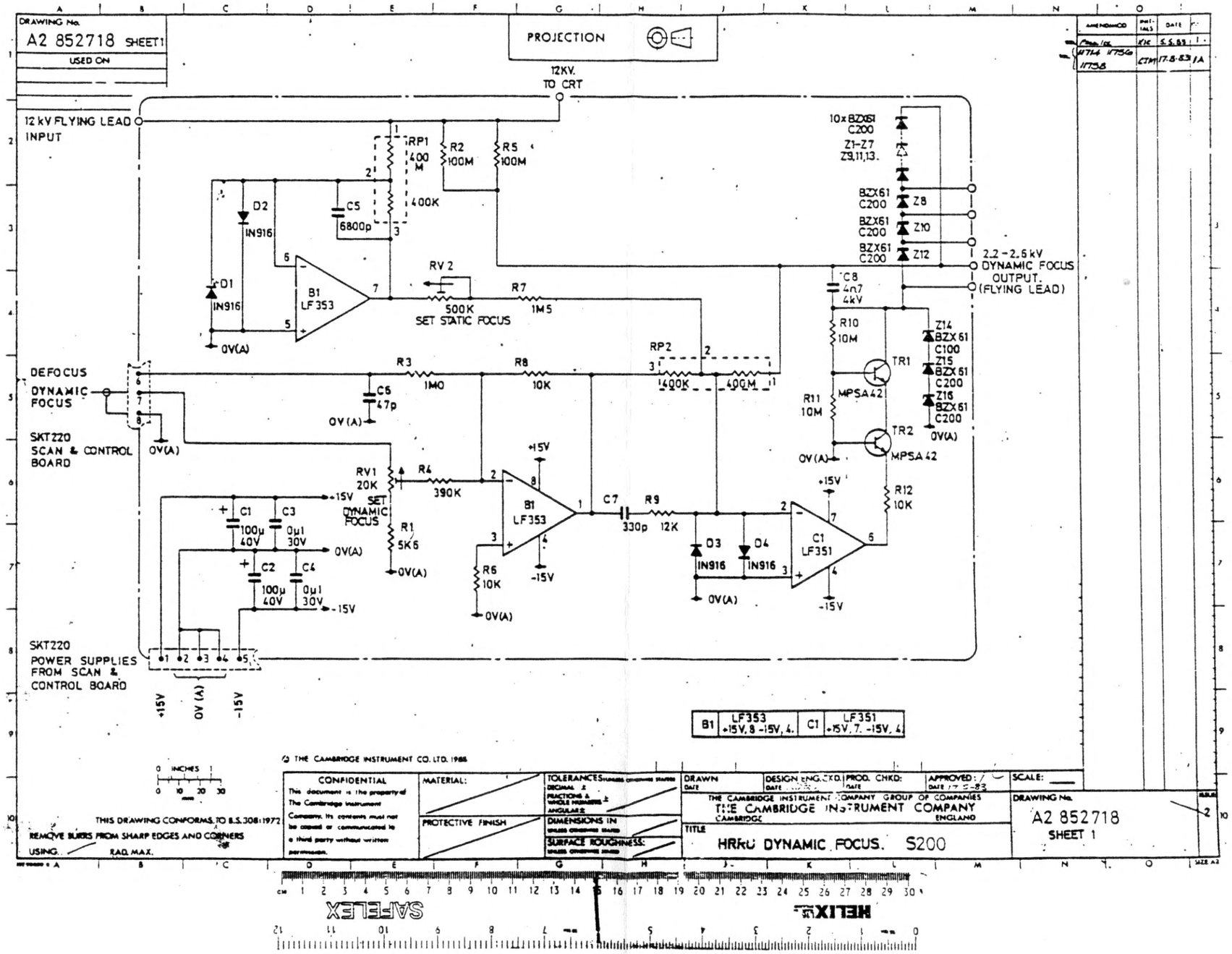
DRAWING No.
A2 852718 SHEET1
USED ON
PROJECTION
12KV. TO CRT
12 kV FLYING LEAD INPUT
RP1 400 M
R2 100M
R5 100M
400K
C5 6800p
D2 IN916
D1 IN916
B1 LF353
RV 2
500K SET STATIC FOCUS
R7 1M5
0V(A)
10x BZX61 C200 Z1-Z7 Z9,11,13.
BZX61 C200 Z8
BZX61 C200 Z10
BZX61 C200 Z12
2.2-2.6 kV DYNAMIC FOCUS OUTPUT. (FLYING LEAD)
C8 4n7 4kV
R10 10M
R11 10M
TR1 MPSA42
TR2 MPSA42
Z14 BZX61 C100
Z15 BZX61 C200
Z16 BZX61 C200
RP2 400K 400M
DEFOCUS
DYNAMIC FOCUS
SKT220 SCAN & CONTROL BOARD
R3 1M0
R8 10K
C6 47p
RV1 20K SET DYNAMIC FOCUS
R4 390K
R1 5K6
B1 LF353
R6 10K
C7 330p
R9 12K
D3 IN916
D4 IN916
C1 LF351
R12 10K
C1 100µ 40V
C3 0µ1 30V
C2 100µ 40V
C4 0µ1 30V
+15V
-15V
SKT220 POWER SUPPLIES FROM SCAN & CONTROL BOARD
B1 LF353 +15V, 8 -15V, 4.
C1 LF351 +15V, 7. -15V, 4.
© THE CAMBRIDGE INSTRUMENT CO. LTD. 1986
THIS DRAWING CONFORMS TO B.S.308:1972
REMOVE BURRS FROM SHARP EDGES AND CORNERS
USING RAD. MAX.
CONFIDENTIAL
This document is the property of The Cambridge Instrument Company. Its contents must not be copied or communicated to a third party without written permission.
MATERIAL:
PROTECTIVE FINISH
TOLERANCES
DIMENSIONS IN
SURFACE ROUGHNESS:
DRAWN
DESIGN ENG. CKD.
PROD. CHKD:
APPROVED:
SCALE:
THE CAMBRIDGE INSTRUMENT COMPANY GROUP OF COMPANIES
THE CAMBRIDGE INSTRUMENT COMPANY
CAMBRIDGE ENGLAND
TITLE
HRRU DYNAMIC FOCUS. S200
DRAWING No.
A2 852718
SHEET 1
SAFELEX
HELIX

A1 855124 SHEET 1

USED ON
S 260
S 360

PROJECTION

DO NOT SCALE

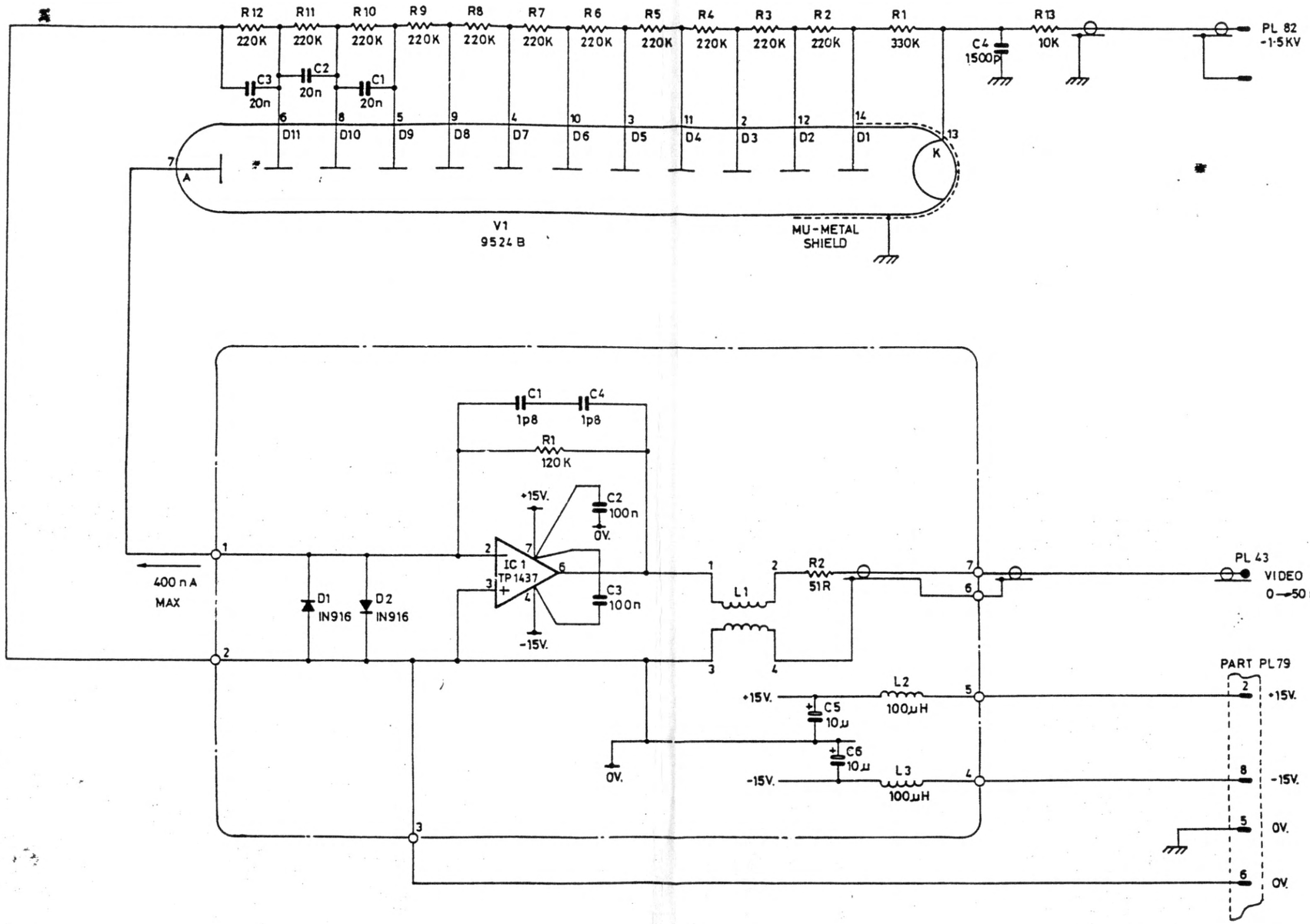

P.E. PRO. No.		
D.O.	A1	
	A2	
P.E.	A1	
	A2	
TOOL REQ. NO(S)		

REMOVE BURRS FROM SHARP EDGES AND CORNERS USING..... RAD. MAX.

© THE CAMBRIDGE INSTRUMENT COMPANY LTD. 1981

DRN. AC DATE: 12.10.89.	CONFIDENTIAL	MATERIAL:	TOLERANCES (UNLESS OTHERWISE STATED) DECIMAL : FRACTIONS & WHOLE NUMBERS : ANGULAR :
DESIGN ENG. DATE: 12.10.89	This document is the property of The Cambridge Instrument Company Ltd. Its contents must not be copied or communicated to a third party without the written permission of the Company.	PROTECTIVE FINISH	DIMENSIONS IN UNLESS OTHERWISE STATED
APPROVED. DATE:			SURFACE ROUGHNESS UNLESS OTHERWISE STATED
M.E.P. MR 13-10-89.			

THE CAMBRIDGE INSTRUMENT GROUP OF COMPANIES
THE CAMBRIDGE INSTRUMENT COMPANY LTD.
CAMBRIDGE ENGLAND.

TITLE
HEAD AMPLIFIER

SCALE:

DRAWING No.
A1 855124
SHEET 1

0 INCHES 1
0 10 20 30 mm

SIZE A1

78

DRAWING No AO-810362

USED ON 10 310 & 10

DO NOT SCALE

PROJECTION

ISSUE	DATE	BY	CK
25809	AB	3/82	3

TO VENT VALVE SK 555

150 W22 BTW34 100K 680nF 385V

N 554 0.6 UG

CONTROL UNIT

VAC AIR AIR MC AIR VAC CH.AT VAC

EARGRAPH DISPLAY (NOT USED ON 5360) SK 567

SK 573 (NUMBERED AS PER 20W IDC CONNECTOR ON SIDE SCREEN)

SK 572 SK 562

SPARE INTERLOCKS SK 575

STAGE TOUCH ALARM I/P SK 558

COMPUTER CONTROL FROM VME I/F SK 232 (50 WAY)

FILAMENT e-/I/M I/L SK 539

ION PUMP CONTROL SK 545

VIEWING WINDOW SK 534

SK 574

SK 535

COMPUTER CONTROL FROM VME I/F SK 231 (50 WAY)

SK 559

TO FAN SK 553

SK 552 TO BAFFLE VALVE

P 550 FROM MAINS UNIT

240V 110V

PART OF TB1 PART OF TB1

15-0-15V 100mA TRANSFORMER

EARTH POINT FROM FD PSU BUS-BAR

SK 560 SK 547 SK 528 SK 547 SK 533 SK 566 SK 157 SK 570 SK 571 SK 523 SK 524

12KV/600V I/L EHT I/L NOT USED NOT USED VIDEO 2 I/P FROM VPU2 VALVE MIMIC VALVE MIMIC AUX ANALOGUE I/P AUX ANALOGUE I/P

SOLID STATE RELAYS FOR PUMPS AND VENT VALVE D.C SUPPLY

GUN ISOLATION VALVE

COLUMN ISOLATION VALVE

SK 566 WINDOWLESS DETECTOR

SK 522 La B6/W SELECT OUT TO EHT SET

SK 521 La B6/W REMOTE SWITCH (NOT USED)

SK 520 TOUCH ALARM OUT

SK 150 VIDEO 1 I/P FROM VPU1

SK 526 NOT USED

SK 525 AUX ANALOGUE I/P

VACUUM CONTROL P.C.B.

RC1 RL2

SK 564 ION PUMP POWER

SK 566 TO T.M.P. PUMP

SPEED CONTACTS

SK 567 TO ROTARY PUMP

PL 551 MAINS IN FROM ED SUPPLY

SK 573 STAGE CONTROL

SK 576 SPARE

NOTE PE: PROTECTIVE EARTH

CONFIDENTIAL This document is the property of Cambridge Instruments Ltd. Its contents must not be copied or communicated to a third party without the written permission of the Company.

MATERIAL

PROTECTIVE FINISH

TOLERANCES unless otherwise stated DECIMAL ± FRACTIONS ± ANGULAR ±

DIMENSIONS IN unless otherwise stated

SURFACE ROUGHNESS unless otherwise stated

DRAWN JEC DATE | TRACED | DES. ENG. CHRG DATE 17/3/82 | MOD. CHRG. DATE | APPROVED DATE | SCALE

CAMBRIDGE INSTRUMENTS LTD.

TITLE VACUUM CONTROL UNIT O/A CCT

DRAWING No. A0-910369

© CAMBRIDGE INSTRUMENTS LTD. 1982 THIS DRAWING CONFORMS TO B.S. 308 : 1972 REMOVE BURRS FROM SHARP EDGES AND CORNERS USING ____ EMERY PAPER

PLANDALE S.M.A.

179

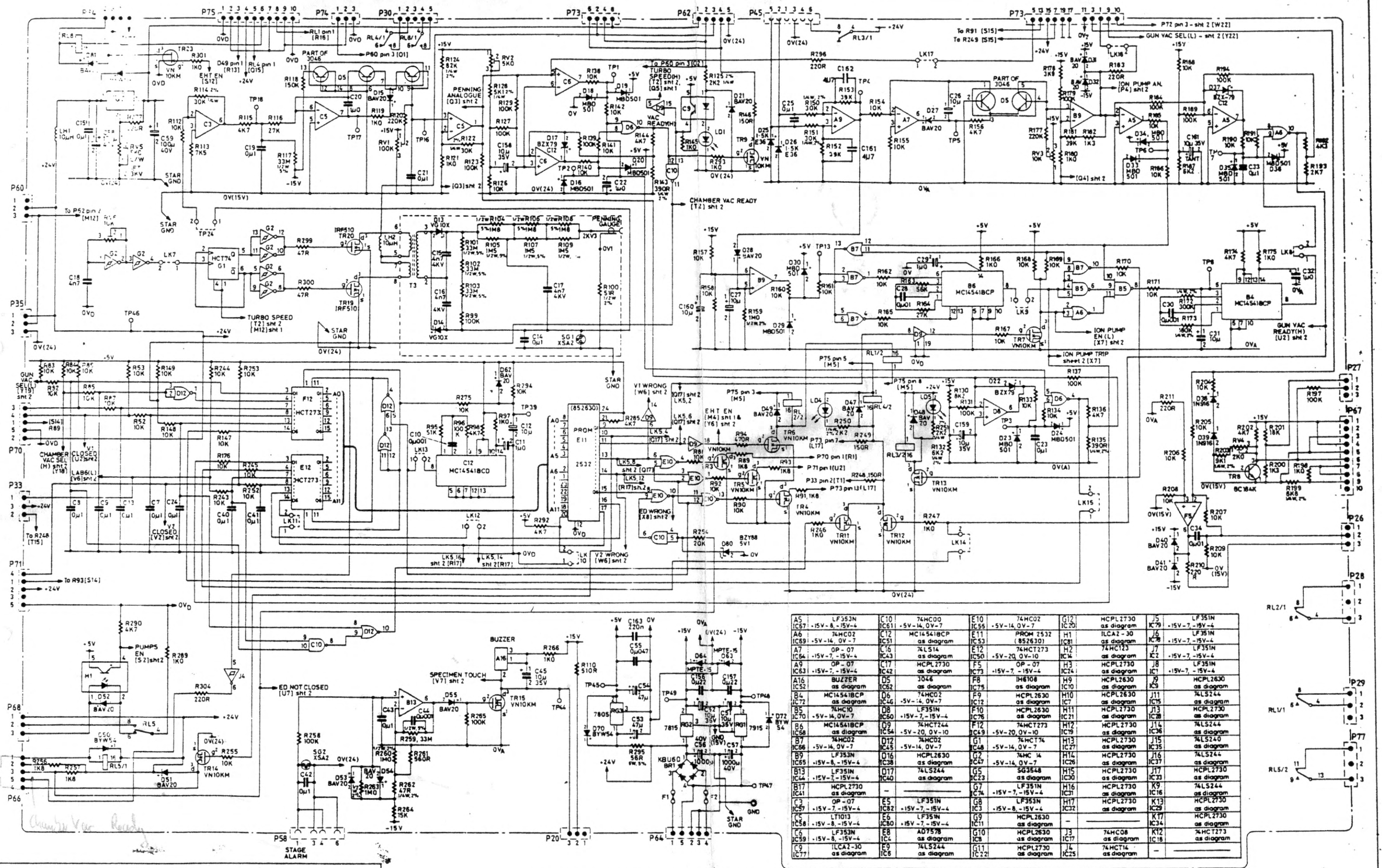

A5 IC67	LF353N	-15V-8, -15V-4	C10 IC61	74HC00	+5V-14, 0V-7	E10 IC55	74HC02	+5V-14, 0V-7	G12 IC20	HCPL2730 as diagram	J5 IC79	LF351N	+15V-7, -15V-4
A6 IC69	74HC02	+5V-14, 0V-7	C12 IC51	MC14541BCP as diagram		E11 IC53	PROM 2532 (852630)		H1 IC81	ILCA2-30 as diagram	J6 IC78	LF351N	+15V-7, -15V-4
A7 IC64	OP-07	-15V-7, -15V-4	C16 IC43	74LS14 as diagram		E12 IC50	74HCT273	+5V-20, 0V-10	H2 IC14	74HC123 as diagram	J7 IC2	LF351N	+15V-7, -15V-4
A9 IC63	OP-07	+15V-7, -15V-4	C17 IC42	HCPL2730 as diagram		F5 IC73	OP-07	-15V-7, -15V-4	H3 IC24	HCPL2730 as diagram	J8 IC1	LF351N	+15V-7, -15V-4
A16 IC52	BUZZER as diagram		D5 IC62	3046 as diagram		F8 IC75	IH6108 as diagram		H9 IC10	HCPL2630 as diagram	J9 IC9	HCPL2630	
B4 IC72	MC14541BCP as diagram		D6 IC46	74HC02	-5V-14, 0V-7	F9 IC12	HCPL2630 as diagram		H10 IC7	HCPL2630 as diagram	J11 IC15	74LS244	as diagram
B5 IC70	74HC10	-5V-14, 0V-7	D8 IC50	LF351N	+15V-7, -15V-4	F10 IC76	HCPL2630 as diagram		H11 IC21	HCPL2730 as diagram	J13 IC28	HCPL2730	
B6 IC58	MC14541BCP as diagram		D9 IC54	74HCT244	-5V-20, 0V-10	F12 IC49	74HCT273	+5V-20, 0V-10	H12 IC19	HCPL2730 as diagram	J14 IC36	74LS244	as diagram
B7 IC66	74HC02	-5V-14, 0V-7	D12 IC45	74HC02	-5V-14, 0V-7	G1 IC48	74HC74	-5V-14, 0V-7	H13 IC27	HCPL2730 as diagram	J15 IC35	74LS240	as diagram
B9 IC65	LF353N	-15V-8, -15V-4	D16 IC38	HCPL2630 as diagram		G2 IC47	74HC 14	-5V-14, 0V-7	H14 IC26	HCPL2730 as diagram	J16 IC37	74LS244	as diagram
B13 IC44	LF351N	-15V-7, -15V-4	D17 IC40	74LS244 as diagram		G5 IC23	SG3548 as diagram		H15 IC30	HCPL2730 as diagram	J17 IC33	HCPL2730	as diagram
B17 IC41	HCPL2730 as diagram		–			G7 IC74	LF351N	-15V-7, -15V-4	H16 IC31	HCPL2730 as diagram	K9 IC16	74LS244	as diagram
C3 IC57	OP-07	+15V-7, -15V-4	E5 IC82	LF351N	+15V-7, -15V-4	G8 IC3	LF353N	-15V-8, -15V-4	H17 IC32	HCPL2730 as diagram	K13 IC29	HCPL2730	as diagram
C5 IC58	TL1013	-15V-8, -15V-4	E6 IC80	LF351N	+15V-7, -15V-4	G9 IC11	HCPL2630 as diagram		–		K17 IC34	HCPL2730	as diagram
C6 IC59	LF353N	-15V-8, -15V-4	E8 IC4	AO7578 as diagram		G10 IC8	HCPL2630 as diagram		J3 IC17	74HC08	K12 IC18	74HCT273	as diagram
C9 IC77	ILCA2-30 as diagram		E9 IC6	74LS244 as diagram		G11 IC22	HCPL2730 as diagram		J4 IC25	74HCT14 as diagram	–		

RESISTORS MARKED THUS * ARE 1/8WATT, 0·1%TOLERANCE. ALL REMAINING RESISTORS ARE 0.6W, 1% TOL. UNLESS OTHERWISE STATED.

CAMBRIDGE INSTRUMENTS LIMITED 1990
THIS DRAWING IS THE PROPERTY OF THE CAMBRIDGE INSTRUMENT CO LTD. GROUP OF COMPANIES WHICH INCLUDE CAMBRIDGE INSTRUMENTS LTD., U.K., CAMBRIDGE INSTRUMENTS GMBH, WEST GERMANY, CAMBRIDGE INSTRUMENTS SARL, FRANCE, CAMBRIDGE INSTRUMENTS INC. U.S.A. THIS DRAWING SHALL NOT BE COPIED OR REPRODUCED IN ANY FORM TO THIRD PERSONS WITHOUT WRITTEN PERMISSION FROM CAMBRIDGE INSTRUMENTS LIMITED.
IN THE U.S.A. THIS DRAWING IS LOANED WITH THE EXPRESSED AGREEMENT THAT THE DRAWING AND INFORMATION THEREIN CONTAINED ARE THE PROPERTY OF CAMBRIDGE INSTRUMENTS INC. AND WILL NOT BE REPRODUCED COPIED OR OTHERWISE DISPOSED OF DIRECTLY, AND WILL NOT BE USED IN WHOLE OR IN PART TO ASSIST IN OBTAINING OR TO FURNISH ANY INFORMATION FOR THE MAKING OF DRAWINGS OR PRINTS OR OTHER REPRODUCTIONS THEREOF OR FOR THE MANUFACTURE OF APPARATUS OR PARTS THE REOF EXCEPT UPON WRITTEN PERMISSION OF CAMBRIDGE INSTRUMENTS INC. AND FURTHER THAT THE ACCEPTANCE OF THIS DRAWING WILL BE CONSTRUED AS AN ACCEPTANCE OF THE FOREGOING AGREEMENT

VAC CONTROL P.C.B. CIRCUIT DIAGRAM

CAMBRIDGE INSTRUMENTS LIMITED

PRODUCT S360

AO 855530 Sheet 1

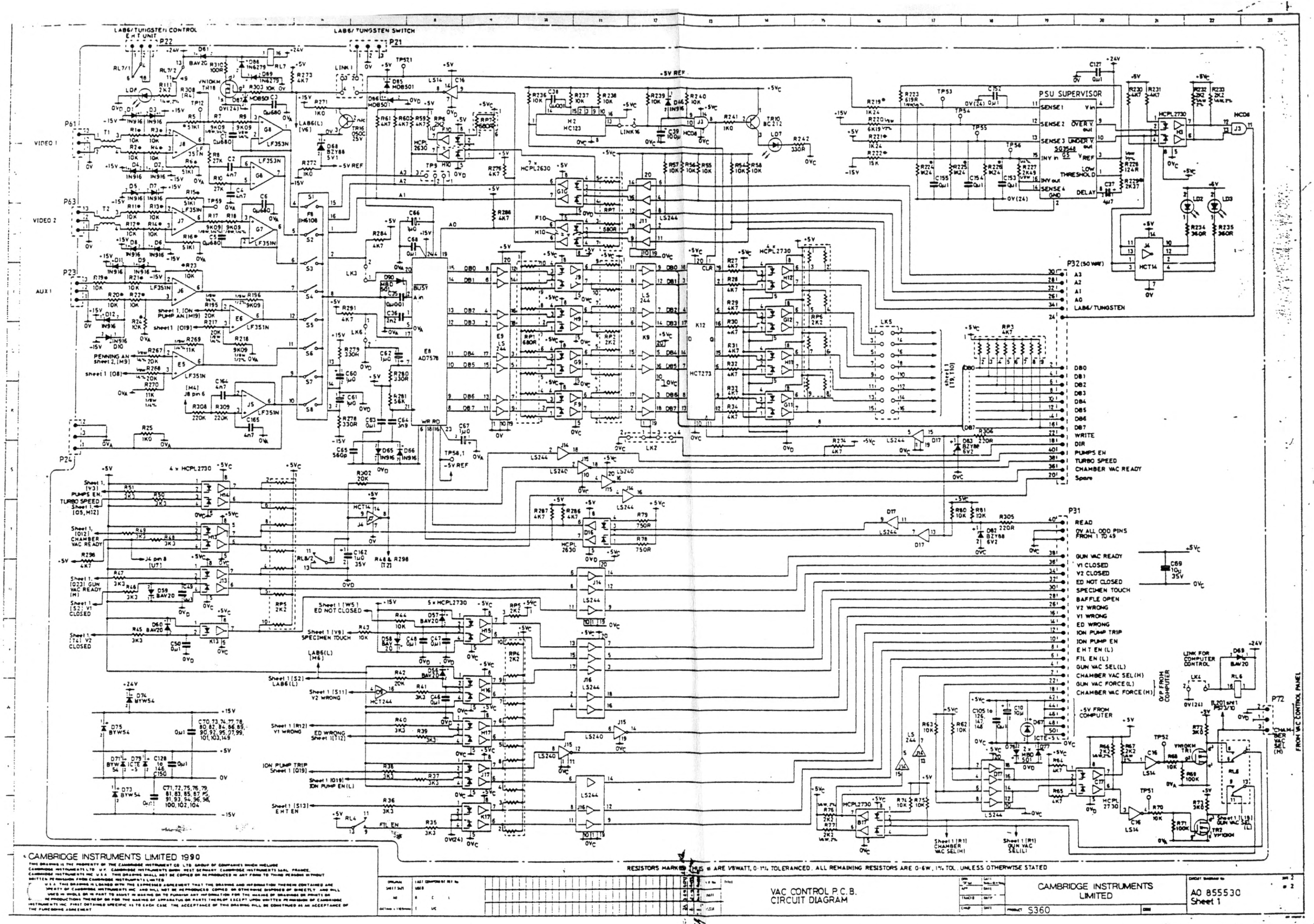

© CAMBRIDGE INSTRUMENTS LIMITED 1990

VAC CONTROL P.C.B.
CIRCUIT DIAGRAM

CAMBRIDGE INSTRUMENTS LIMITED

PRODUCT S360

A0 855530
Sheet 1

81

PLANDALE S.M.A.

DRAWING No.
A3 854096 sht 1

USED ON
714177

PROJECTION

~~DO NOT SCALE~~

ENG	PCA	AMEND/MOD.	INITIALS	DATE	ISSUE
MR		INIT. ISSUE	E.L.	6-1-87	1
MR		23505	M.G.	26/5/87	2

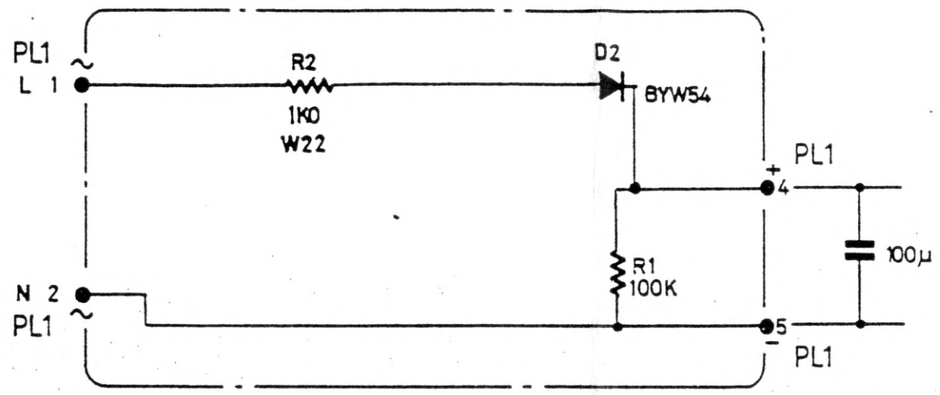

© CAMBRIDGE INSTRUMENTS 1986

THIS DRAWING IS THE PROPERTY OF THE CAMBRIDGE INSTRUMENT CO. LTD. GROUP OF COMPANIES WHICH INCLUDE CAMBRIDGE INSTRUMENTS LTD., U.K., CAMBRIDGE INSTRUMENTS GMBH, WEST GERMANY, CAMBRIDGE INSTRUMENTS SARL, FRANCE, CAMBRIDGE INSTRUMENTS INC. U.S.A. THIS DRAWING SHALL NOT BE REPRODUCED IN ANY FORM TO THIRD PERSONS WITHOUT WRITTEN PERMISSION FROM CAMBRIDGE INSTRUMENTS LTD. IN THE U.S.A. THIS DRAWING IS LOANED WITH THE EXPRESSED AGREEMENT THAT THE DRAWING AND INFORMATION THERIN CONTAINED ARE THE PROPERTY OF CAMBRIDGE INSTRUMENTS INC. AND WILL NOT BE REPRODUCED, COPIED, OR OTHERWISE DISPOSED OF DIRECTLY, AND WILL NOT BE USED IN WHOLE OR IN PART TO ASSIST IN MAKING OR TO FURNISH ANY INFORMATION FOR THE MAKING OF DRAWINGS OR PRINTS OR OTHER REPRODUCTIONS THEREOF OR FOR THE MAKING OF APPARATUS OR PARTS THEREOF EXCEPT UPON WRITTEN PERMISSION OF CAMBRIDGE INSTRUMENTS INC. FIRST OBTAINED SPECIFIC AS TO EACH CASE. THE ACCEPTANCE OF THIS DRAWING WILL BE CONSTRUED AS AN ACCEPTANCE OF THE FOREGOING AGREEMENT.

CONFIDENTIAL
This document is the property of Cambridge Instruments Ltd. Its contents must not be copied or communicated to a third party without the written permission of the Company.

MATERIAL

PROTECTIVE FINISH

TOLERANCES UNLESS OTHERWISE STATED
DECIMAL ±
FRACTIONS &
WHOLE NUMBERS
ANGULAR ±

DIMENSIONS IN UNLESS OTHERWISE STATED

SURFACE ROUGHNESS UNLESS OTHERWISE STATED

DRAWN DATE 12/11/86 | TRACED | DES. ENG. CHKD DATE 6/1/87 | PROD CHKD DATE 6/1/87 | APPROVED DATE | SCALE

CAMBRIDGE INSTRUMENTS LTD.

TITLE VENT VALVE D.C. SUPPLY CIRCUIT DIAGRAM

DRAWING No.
A3 854096 sht 1

SIZE A3

HARPER AND TUNSTALL PDS 8172

82

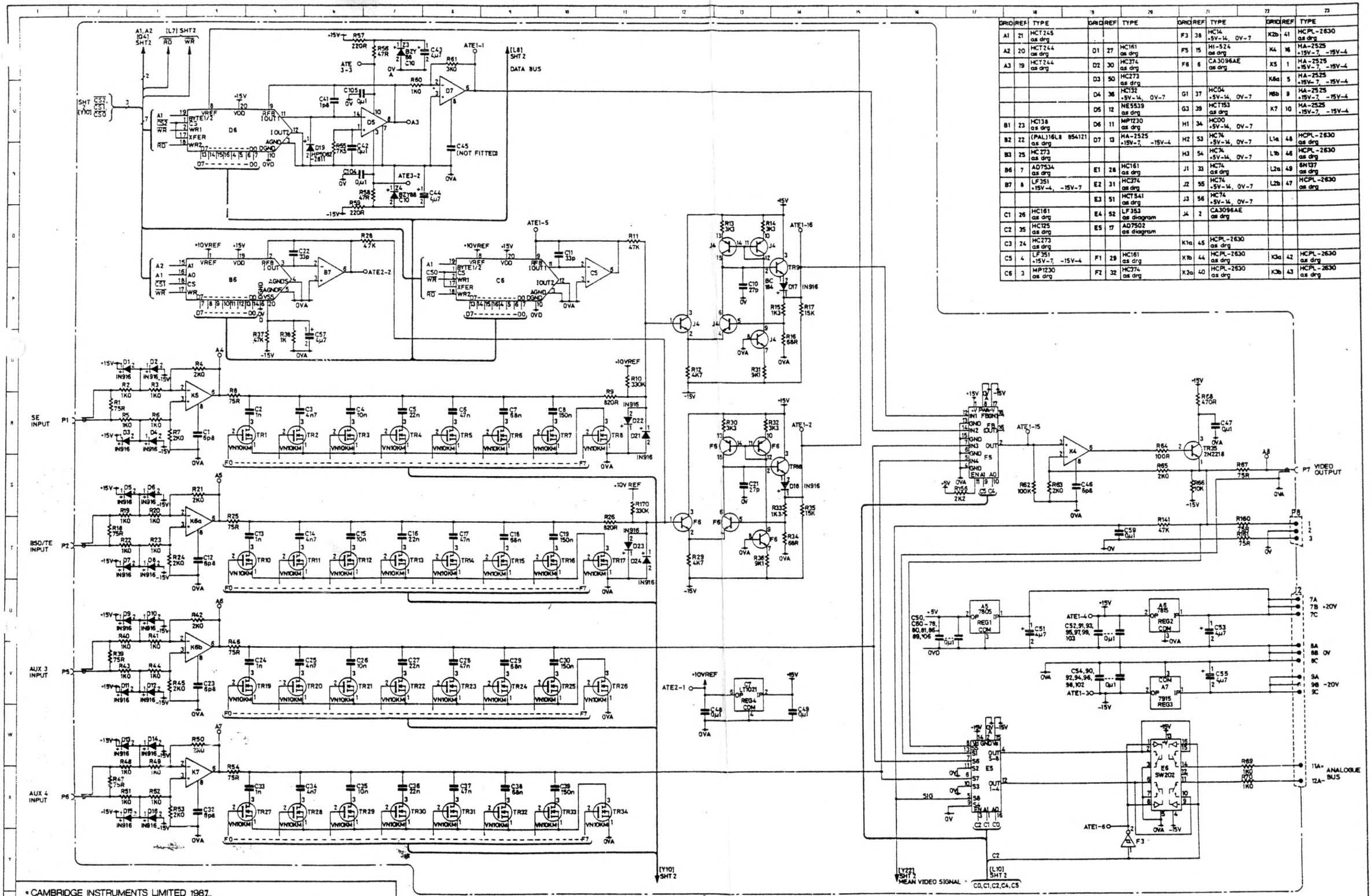

GRID	REF	TYPE	GRID	REF	TYPE	GRID	REF	TYPE	GRID	REF	TYPE
A1	21	HCT245 as drg				F3	38	HC14 +5V-14, 0V-7	K2b	41	HCPL-2630 as drg
A2	20	HCT244 as drg	D1	27	HC161 as drg	F5	15	HI-524 as drg	K4	16	HA-2525 +15V-7, -15V-4
A3	19	HCT244 as drg	D2	30	HC374 as drg	F6	6	CA3096AE as drg	K5	1	HA-2525 +15V-7, -15V-4
			D3	50	HC273 as drg				K6a	5	HA-2525 +15V-7, -15V-4
			D4	36	HC132 +5V-14, 0V-7	G1	37	HC04 +5V-14, 0V-7	K6b	9	HA-2525 +15V-7, -15V-4
			D5	12	NE5539 as drg	G3	39	HCT153 as drg	K7	10	HA-2525 +15V-7, -15V-4
B1	23	HC138 as drg	D6	11	MP1230 as drg	H1	34	HC00 +5V-14, 0V-7			
B2	22	(PAL)16L8 854121 as drg	D7	13	HA-2525 +15V-7, -15V-4	H2	53	HC74 +5V-14, 0V-7	L1a	48	HCPL-2630 as drg
B3	25	HC273 as drg				H3	54	HC74 +5V-14, 0V-7	L1b	46	HCPL-2630 as drg
B6	7	AD7534 as drg	E1	28	HC161 as drg	J1	33	HC74 as drg	L2a	49	6N137 as drg
B7	8	LF351 +15V-4, -15V-7	E2	31	HC374 as drg	J2	55	HC74 +5V-14, 0V-7	L2b	47	HCPL-2630 as drg
			E3	51	HCT541 as drg	J3	56	HC74 +5V-14, 0V-7			
C1	26	HC161 as drg	E4	52	LF353 as diagram	J4	2	CA3096AE as drg			
C2	35	HC125 as drg	E5	17	AD7502 as diagram						
C3	24	HC273 as drg				K1a	45	HCPL-2630 as drg			
C5	4	LF351 +15V-7, -15V-4	F1	29	HC161 as drg	K1b	44	HCPL-2630 as drg	K3a	42	HCPL-2630 as drg
C6	3	MP1230 as drg	F2	32	HC374 as drg	K2a	40	HCPL-2630 as drg	K3b	43	HCPL-2630 as drg

• CAMBRIDGE INSTRUMENTS LIMITED 1987.

THIS DRAWING IS THE PROPERTY OF THE CAMBRIDGE INSTRUMENT CO. LTD. GROUP OF COMPANIES WHICH INCLUDE CAMBRIDGE INSTRUMENTS LTD., U.K., CAMBRIDGE INSTRUMENTS GMBH, WEST GERMANY, CAMBRIDGE INSTRUMENTS SARL, FRANCE. CAMBRIDGE INSTRUMENTS INC. U.S.A. THIS DRAWING SHALL NOT BE COPIED OR REPRODUCED IN ANY FORM TO THIRD PERSONS WITHOUT WRITTEN PERMISSION FROM CAMBRIDGE INSTRUMENTS LIMITED.
IN THE U.S.A. THIS DRAWING IS LOANED WITH THE EXPRESSED AGREEMENT THAT THE DRAWING AND INFORMATION THEREIN CONTAINED ARE THE PROPERTY OF CAMBRIDGE INSTRUMENTS INC. AND WILL NOT BE REPRODUCED, COPIED, OR OTHERWISE DISPOSED OF DIRECTLY, AND WILL NOT BE USED IN WHOLE OR IN PART TO ASSIST IN MAKING OR TO FURNISH ANY INFORMATION FOR THE MAKING OF DRAWINGS OR PRINTS OR OTHER REPRODUCTIONS THEREOF OR FOR THE MAKING OF APPARATUS OR PARTS THEREOF EXCEPT UPON WRITTEN PERMISSION OF CAMBRIDGE INSTRUMENTS INC. FIRST OBTAINED SPECIFIC AS TO EACH CASE. THE ACCEPTANCE OF THIS DRAWING WILL BE CONSTRUED AS AN ACCEPTANCE OF THE FOREGOING AGREEMENT.

ORIGINAL SHEET SIZE A0 — LAST COMPONENT REF No USED R C L — 1841mm x 1189mm T I/C

TITLE: E.O. VIDEO PROCESSOR (2) -CIRCUIT DIAGRAM

DRN P.A.H. DATE 5-1-87 — APP G.P. DATE 30-1-87 — TRACED DATE — CHKD DATE 30-1-87

CAMBRIDGE INSTRUMENTS LIMITED

CIRCUIT DIAGRAM No A0 853548 — SHT 1 of 2 — Sht 1

83

PLANDALE S.M.A.

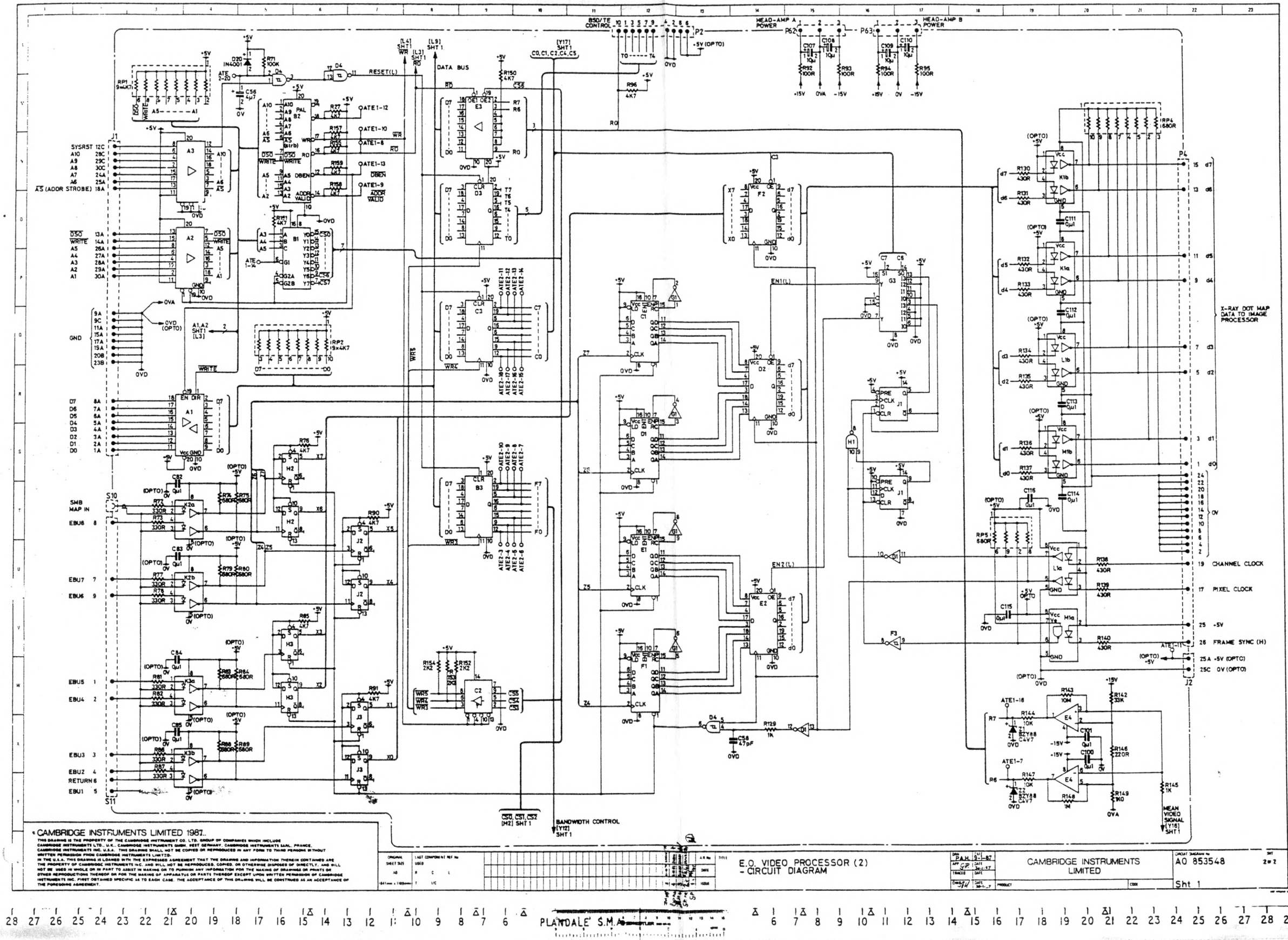

© CAMBRIDGE INSTRUMENTS LIMITED 1987.

THIS DRAWING IS THE PROPERTY OF THE CAMBRIDGE INSTRUMENT CO. LTD. GROUP OF COMPANIES WHICH INCLUDE CAMBRIDGE INSTRUMENTS LTD., U.K., CAMBRIDGE INSTRUMENTS GMBH, WEST GERMANY, CAMBRIDGE INSTRUMENTS SARL, FRANCE, CAMBRIDGE INSTRUMENTS INC. U.S.A. THIS DRAWING SHALL NOT BE COPIED OR REPRODUCED IN ANY FORM TO THIRD PERSONS WITHOUT WRITTEN PERMISSION FROM CAMBRIDGE INSTRUMENTS LIMITED.
IN THE U.S.A. THIS DRAWING IS LOANED WITH THE EXPRESSED AGREEMENT THAT THE DRAWING AND INFORMATION THEREIN CONTAINED ARE THE PROPERTY OF CAMBRIDGE INSTRUMENTS INC. AND WILL NOT BE REPRODUCED, COPIED, OR OTHERWISE DISPOSED OF DIRECTLY, AND WILL NOT BE USED IN WHOLE OR IN PART TO ASSIST IN MAKING OR TO FURNISH ANY INFORMATION FOR THE MAKING OF DRAWINGS OR PRINTS OR OTHER REPRODUCTIONS THEREOF OR FOR THE MAKING OF APPARATUS OR PARTS THEREOF EXCEPT UPON WRITTEN PERMISSION OF CAMBRIDGE INSTRUMENTS INC. FIRST OBTAINED SPECIFIC AS TO EACH CASE. THE ACCEPTANCE OF THIS DRAWING WILL BE CONSTRUED AS AN ACCEPTANCE OF THE FOREGOING AGREEMENT.

ORIGINAL SHEET SIZE	LAST COMPONENT REF No	USED							
A0	R	C	L						
1841mm x 1189mm	T	I/C							

TITLE: E.O. VIDEO PROCESSOR (2) - CIRCUIT DIAGRAM

DRN P.A.H.	DATE 9-1-87	CAMBRIDGE INSTRUMENTS LIMITED	CIRCUIT DIAGRAM No A0 853548
APP GP	DATE 30-1-87		SHT 2 of 2
TRACED	DATE		
CHKD	DATE 30-1-87	PRODUCT	CODE

Sht 1

84

PLANDALE S.M.A.

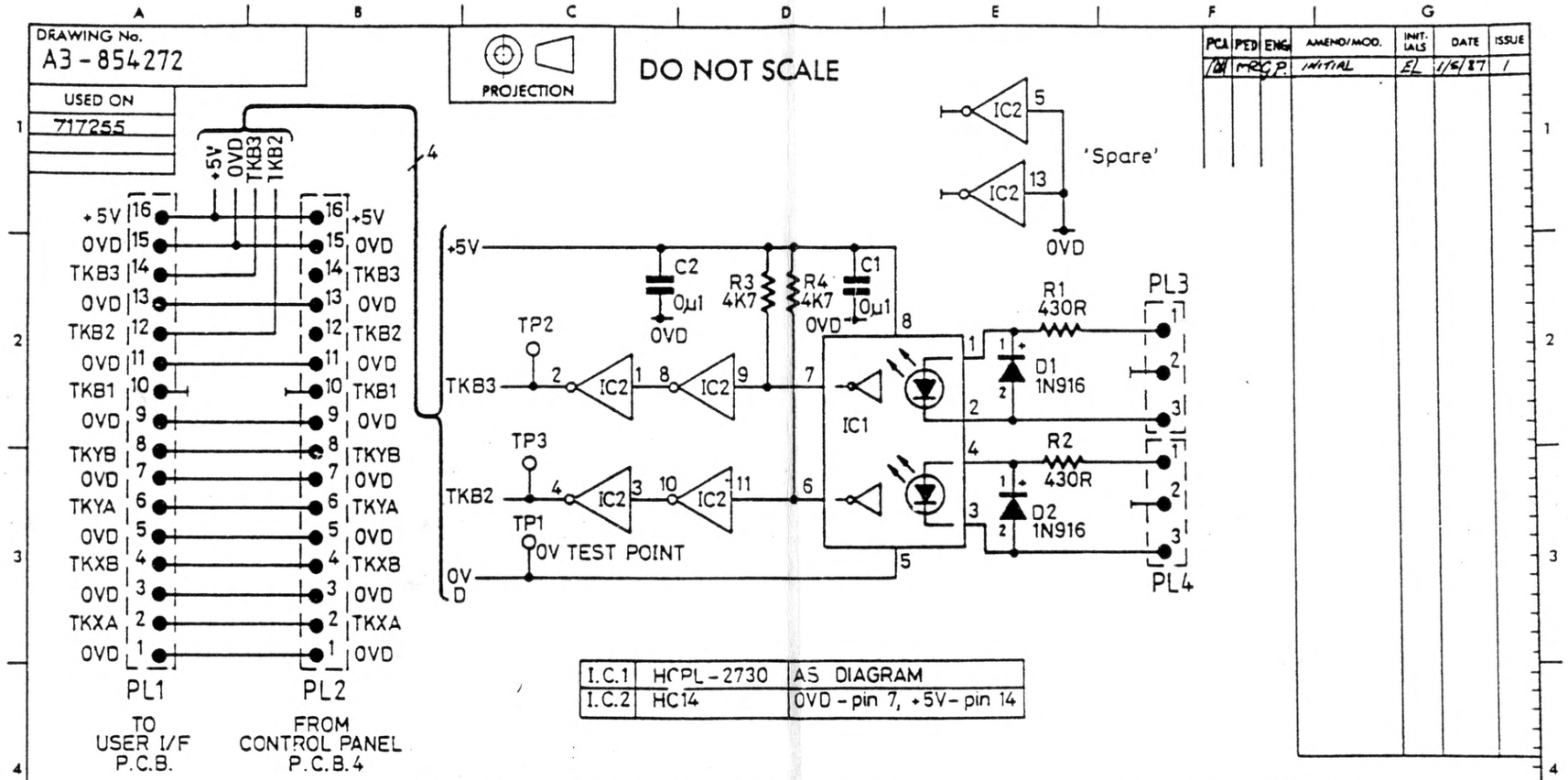

I.C.1	HCPL-2730	AS DIAGRAM
I.C.2	HC14	0VD - pin 7, +5V - pin 14

THIS DRAWING IS THE PROPERTY OF THE CAMBRIDGE INSTRUMENT CO. LTD. GROUP OF COMPANIES WHICH INCLUDE CAMBRIDGE INSTRUMENTS LTD. U.K., CAMBRIDGE INSTRUMENTS GMBH, WEST GERMANY, CAMBRIDGE INSTRUMENTS SARL, FRANCE, CAMBRIDGE INSTRUMENTS INC. U.S.A. THIS DRAWING SHALL NOT BE REPRODUCED IN ANY FORM TO THIRD PERSONS WITHOUT WRITTEN PERMISSION FROM CAMBRIDGE INSTRUMENTS LTD. IN THE U.S.A. THIS DRAWING IS LOANED WITH THE EXPRESSED AGREEMENT THAT THE DRAWING AND INFORMATION THERIN CONTAINED ARE THE PROPERTY OF CAMBRIDGE INSTRUMENTS INC. AND WILL NOT BE REPRODUCED, COPIED, OR OTHERWISE DISPOSED OF DIRECTLY, AND WILL NOT BE USED IN WHOLE OR IN PART TO ASSIST IN MAKING OR TO FURNISH ANY INFORMATION FOR THE MAKING OF DRAWINGS OR PRINTS OR OTHER REPRODUCTIONS THEREOF OR FOR THE MAKING OF APPARATUS OR PARTS THEREOF EXCEPT UPON WRITTEN PERMISSION OF CAMBRIDGE INSTRUMENTS INC. FIRST OBTAINED SPECIFIC AS TO EACH CASE. THE ACCEPTANCE OF THIS DRAWING WILL BE CONSTRUED AS AN ACCEPTANCE OF THE FOREGOING AGREEMENT.

© CAMBRIDGE INSTRUMENTS LTD. 1987...

CONFIDENTIAL
This document is the property of Cambridge Instruments Ltd. Its contents must not be copied or communicated to a third party without the written permission of the Company.

MATERIAL:

PROTECTIVE FINISH

TOLERANCES (UNLESS OTHERWISE STATED) DECIMAL ± FRACTIONS & WHOLE NUMBER ± ANGULAR ±

DIMENSIONS IN UNLESS OTHERWISE STATED

SURFACE ROUGHNESS: UNLESS OTHERWISE STATED

DRAWN Elach DATE 1/6/87 | TRACED | DES. ENG. CHKD GP. DATE 1-5-87 | PROJ. CHKD MR DATE 06/05/87 | APPROVED DATE | SCALE

CAMBRIDGE INSTRUMENTS LTD.

TITLE
EXTERNAL MODE PCB CIRCUIT DIAGRAM - S360

DRAWING No.
A3-854272
Sheet 1

SIZE A3

85

DRAWING No.
A3–854426 SHT1

USED ON
717985

PED	ENG	PCA	MOD No.	INIT.	DATE	ISS.
GD	MAM	S H	INITIAL	T H	16-11-87	1
MR	TWF	KP	24938	J W	2-2-90	2
MR	JWF	JW	40257 REDRAWN	AMS	JUL 90	3

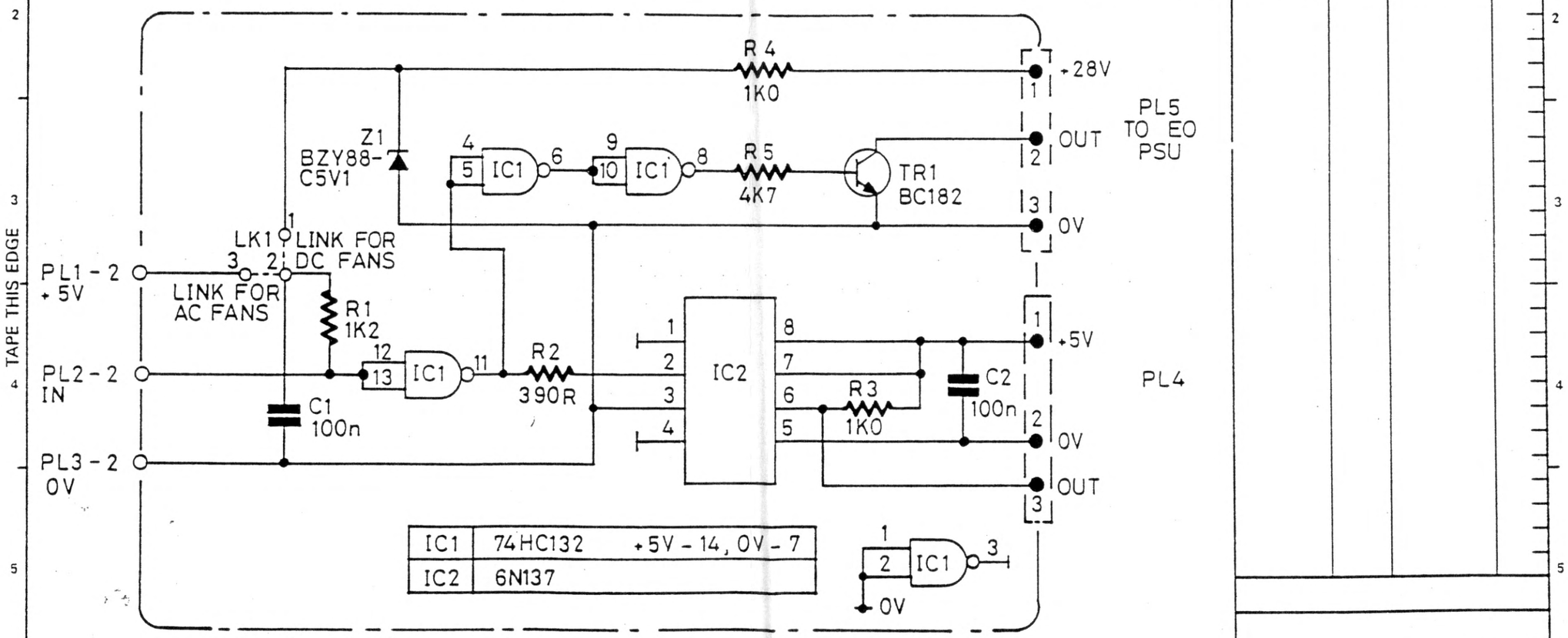

TAPE THIS EDGE

© CAMBRIDGE INSTRUMENTS LTD. 1990

CONFIDENTIAL

This document is the property of Cambridge Instruments Ltd. Its contents must not be copied or communicated to a third party without written permission.

DIMENSIONS IN mm.
REMOVE BURRS FROM SHARP EDGES AND CORNERS USING .....RAD MAX.

INCHES 1
0 10 20 30
mm

UNLESS OTHERWISE STATED
TOLERANCES:
DECIMAL ±
FRACTIONS & WHOLE NUMBERS ±
ANGULAR ± °
SURFACE FINISH: µmRa

SCALE:

THIS DRAWING CONFORMS TO BS 308

DRN: AMS DATE: JUL 90
ENG. CHKD: TWF DATE: 06.08.90
PROD. CHKD: MR DATE: 6/8/90
APPROVED: JW DATE: 7-8-90

MATERIAL:

PROTECTIVE FINISH:

CAMBRIDGE INSTRUMENTS LTD.

TITLE:
LINK TEMP PCB
CIRCUIT DIAGRAM

DRAWING No.
SHT 1
A3–854426

U.D.O. 6898/87 (25/33)

DRAWING No.
A2 - 854440 sht.1

USED ON
717991

PROJECTION

P.E.D.	ENG	PCB.	AMEND/MOD.	INIT. IALS	DATE	ISSUE
TMR	JG7	TWF	INITIAL	GL	30.10.87	1

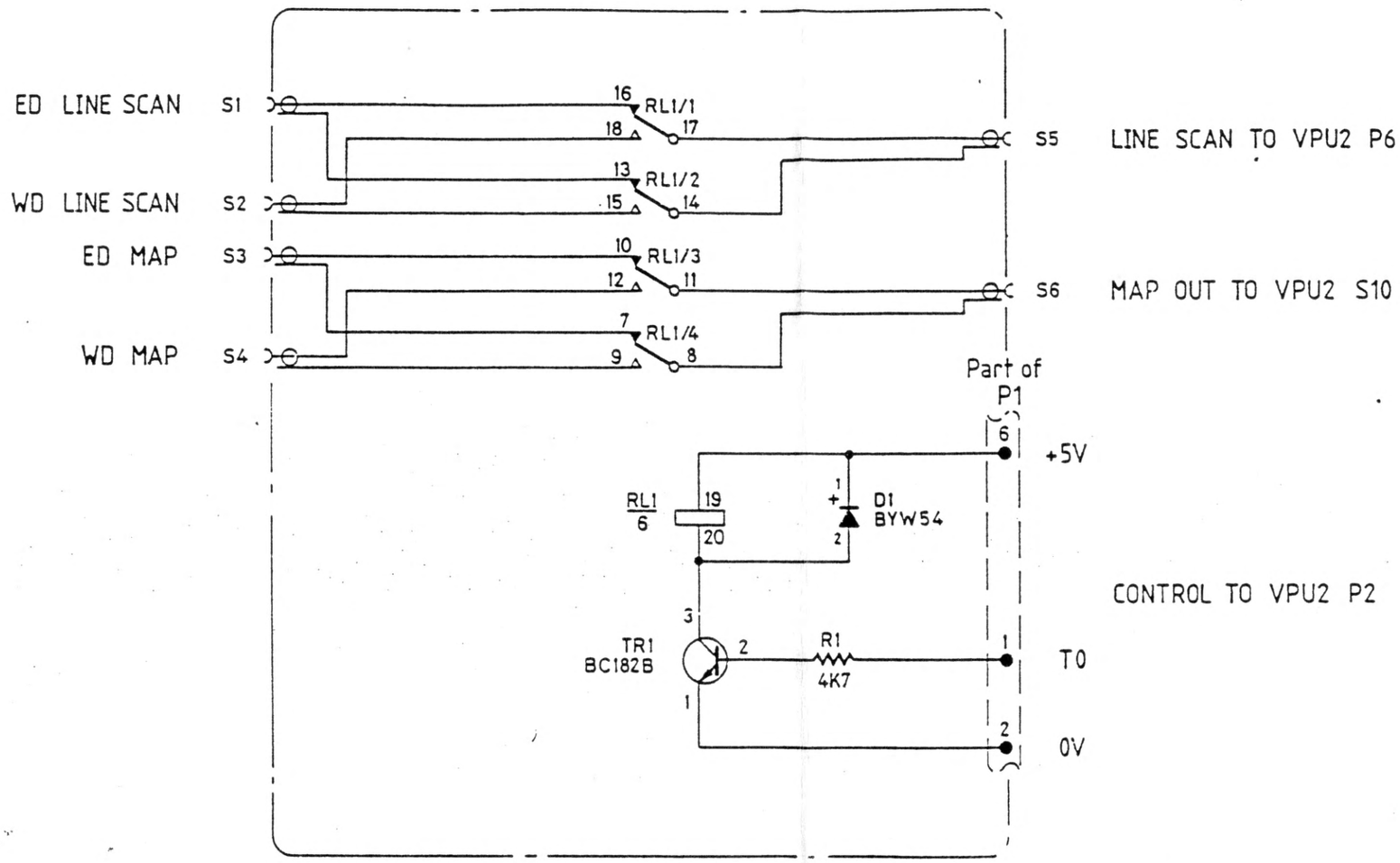

© CAMBRIDGE INSTRUMENTS LTD. 1987

0 INCHES 1
0 10 20 30
mm

~~THIS DRAWING CONFORMS TO B.S.308:1972~~

REMOVE BURRS FROM SHARP EDGES AND CORNERS
USING.....RAD. MAX.

CONFIDENTIAL
This document is the property of Cambridge Instruments Ltd
Its contents must not be copied or communicated to a third party without written permission.

MATERIAL:

PROTECTIVE FINISH

TOLERANCES UNLESS OTHERWISE STATED:
DECIMAL ±
FRACTIONS & WHOLE NUMBER ±
ANGULAR ±

DIMENSIONS IN UNLESS OTHERWISE STATED

SURFACE ROUGHNESS: UNLESS OTHERWISE STATED

DRAWN	DESIGN ENG.CKD.	PROD. CHKD.	APPROVED:	SCALE:
DATE 30.10.87	DATE 09.11.87 TWF	DATE 9/11/87	DATE	

CAMBRIDGE INSTRUMENTS LTD.

TITLE S360 EDX/WDX SELECT P.C.B.
CIRCUIT DIAGRAM

DRAWING No. A2 - 854440
sheet 1

ISSUE

SIZE A2

853528 SHT 1

LIMIT SWITCHES P5(Port1)

MOTOR PHASE OUTPUTS P3(Port)

MOTOR PHASE OUTPUTS P 30(Port)

ALL ODD PINS 1-29, 0V

P 1 A B C

P 2 RESET IN CB2 CB1 PB CA2 CA1

PA PARALLEL COMMUNICATIONS PORT

C3 VIA3 R6522A IC 7

C5 VIA 1 R 6522A IC 8

C7 PIA1 68B21 IC 12

C1 VIA 2 R6522A IC 6

D2 VIA 4 IC 14 R 6522A

B1 PAL16R8 (853260) IC5

IC9 B4 PAL16R8 (853261)

IC10 B5 PAL16R8 (853261)

B6 74LS244 IC4

B7 74LS244 IC11

A7 74LS244 IC13

F1 IC1 CD4049

F5 CD4049

F6

F7 IC30

IC2

IC3

E1 IC 26 74HC123

E2 HC138 IC 17

E3 IC 16 HCT244

E4 HCT244 IC 15

E5 IC 28 HCT244

E6 IC 25 HCT244

E7a IC 20 HCT245

E7b 6 5 C 51 IC 34 ACIA

F2 IC 23 HCT245

F3 IC 24 HC244

IC 22 MB 8128 D7

IC 21 127128 D6 (854343) V05

PROGRAM MEMORY

IC 31 HC132

IC 27 HC132

IC 25 HC240

IC 18 LS93 E5

SK 1

TR1 VN10KM

TR2 VN10KM

TR3 VN10KM

RESET SW1

TOUCH ALARM

P 10

P 11

P 12

P 13

P 14

RF3 8x1K5

RP1 8x4K7

RP2 8x1K5

LIMIT SWITCHES

PIA1/VIA1 (X6)

VIA2/VIA3 (X6)

REFRESH

IRQ (7H0)

NMI

NWDS

CLK R/W YDAC(L) XDAC(L) SPARE RES EXT IRQ

WPI COMMON GROUND EARTHING POINT

ALL RESISTORS 0·6W 1% UNLESS OTHERWISE STATED

© CAMBRIDGE INSTRUMENTS LIMITED 1986

THIS DRAWING IS THE PROPERTY OF THE CAMBRIDGE INSTRUMENT CO. LTD. GROUP OF COMPANIES WHICH INCLUDE CAMBRIDGE INSTRUMENTS LTD., U.K., CAMBRIDGE INSTRUMENTS GMBH, WEST GERMANY, CAMBRIDGE INSTRUMENTS SARL, FRANCE CAMBRIDGE INSTRUMENTS INC. U.S.A. THIS DRAWING SHALL NOT BE COPIED OR REPRODUCED IN ANY FORM TO THIRD PERSONS WITHOUT WRITTEN PERMISSION FROM CAMBRIDGE INSTRUMENTS LIMITED.

IN THE U.S.A. THIS DRAWING IS LOANED WITH THE EXPRESSED AGREEMENT THAT THE DRAWING AND INFORMATION THEREIN CONTAINED ARE THE PROPERTY OF CAMBRIDGE INSTRUMENTS INC. AND WILL NOT BE REPRODUCED, COPIED, OR OTHERWISE DISPOSED OF DIRECTLY, AND WILL NOT BE USED IN WHOLE OR IN PART TO ASSIST IN MAKING OR TO FURNISH ANY INFORMATION FOR THE MAKING OF DRAWINGS OR PRINTS OR OTHER REPRODUCTIONS THEREOF OR FOR THE MAKING OF APPARATUS OR PARTS THEREOF EXCEPT UPON WRITTEN PERMISSION OF CAMBRIDGE INSTRUMENTS INC. FIRST OBTAINED SPECIFIC AS TO EACH CASE. THE ACCEPTANCE OF THIS DRAWING WILL BE CONSTRUED AS AN ACCEPTANCE OF THE FOREGOING AGREEMENT.

STEPPER CONTROL CIRCUIT DIAGRAM

CAMBRIDGE INSTRUMENTS LIMITED

PRODUCT: S360

AO-853528 SHT 1.

SHT 1 OF 2

88

DRAWING No A1 853528 SHT 1

USED ON

	1		2		3		4		5		6		7	
A													IC 13	74LS244 +5V-20 0V- 10
B	IC 5	PAL16R8 (853261) +5V-20 0V- 10					IC 9	PAL16R8 (853261) +5V-20 0V- 10	IC 10	PAL16R8 (853261) +5V-20 0V-10	IC 4	74LS244 +5V-20 0V- 10	IC 11	74LS244 +5V-20 0V- ,10,
C	IC 6	R6522A +5V-20 0V-1			IC7	R6522A +5V-20 0V-1			IC 8	R6522A +5V-20 0V-1			IC 12	MC68B21P +5V-20 0V-1
D	IC 35	74HC14 +5V-14 0V-7	IC 14	R6522A +5V- 20 0V- 1			IC 19	R6502A +5V-8 0V- 1, 21, 38			IC 21	V.05 127128 (854343) +5V-28 0V-14,	IC 22	MB8128-10M +5V-24 0V-12
E	IC 26	74HC123 +5V-16 0V- ,8,	IC17	74HC138 +5V- 16 0V- 8	IC 16	74HCT244 +5V-20 0V- 10	IC 15	74HCT244 +5V-20 0V- 10	IC 18	74LS93 +5V-5 0V-10	IC 28	74HCT244 +5V-20 0V- 10,	(a) IC 20	74HCT245 +5V-20 0V - 10
													(b) IC 34	65C51 +5V-15 0V-1
F	IC 25	74HC240 +5V-20 0V- ,10,	IC 23	74HCT245 +5V-20 0V-10	IC 24	74HC244 +5V-20 0V- 10,	IC 3	7406N +5V-14 0V-7	IC 2	CD4049UBE +5V-1 0V-8	IC 1	CD4049UBE +5V-1 0V-8	IC 30	74LS30N +5V-14 0V-7
G	IC 27	74HC132 +5V -14 0V - 7									IC 33	MC1489P +5V-14 0V-7	IC 32	DS1488N +12V-14 -12V-1 0V-7
H	IC 31	74HC132 +5V-14 0V-7			IC 29	ILCA2-30 +5V-5								

© CAMBRIDGE INSTRUMENTS LIMITED 198

THIS DRAWING IS THE PROPERTY OF THE CAMBRIDGE INSTRUMENT CO. LTD. GROUP OF COMPANIES WHICH INCLUDE CAMBRIDGE INSTRUMENTS LTD., U.K., CAMBRIDGE INSTRUMENTS GMBH, WEST GERMANY, CAMBRIDGE INSTRUMENTS SARL, FRANCE CAMBRIDGE INSTRUMENTS INC. U.S.A. THIS DRAWING SHALL NOT BE COPIED OR REPRODUCED IN ANY FORM TO THIRD PERSONS WITHOUT WRITTEN PERMISSION FROM CAMBRIDGE INSTRUMENTS LIMITED.

IN THE U.S.A. THIS DRAWING IS LOANED WITH THE EXPRESSED AGREEMENT THAT THE DRAWING AND INFORMATION THEREIN CONTAINED ARE THE PROPERTY OF CAMBRIDGE INSTRUMENTS INC. AND WILL NOT BE REPRODUCED, COPIED, OR OTHERWISE DISPOSED OF DIRECTLY AND WILL NOT BE USED IN WHOLE OR IN PART TO ASSIST IN MAKING OR TO FURNISH ANY INFORMATION FOR THE MAKING OF DRAWINGS OR PRINTS OR OTHER REPRODUCTIONS THEREOF OR FOR THE MAKING OF APPARATUS OR PARTS THEREOF EXCEPT UPON WRITTEN PERMISSION OF CAMBRIDGE INSTRUMENTS INC. FIRST OBTAINED SPECIFIC AS TO EACH CASE. THE ACCEPTANCE OF THIS DRAWING WILL BE CONSTRUED AS AN ACCEPTANCE OF THE FOREGOING AGREEMENT.

LAST COMPONENT REF No USED

R C L

T VC

C/N No

DATE

ISSUE

UNLESS OTHERWISE STATED ALL RESISTORS ARE 1/4 WATT ±5% TOLERANCE

TITLE

STEPPER CONTROL CIRCUIT DIAGRAM (IC TABLE)

DRN CTMC DATE 16-9-86

APP CMF DATE

TRACED DATE

CHKD RD DATE 16-9-86

CAMBRIDGE INSTRUMENTS LIMITED

PRODUCT S360 CODE

CIRCUIT DIAGRAM No A1 853528 SHT 1

SHT 2 OF 2

89

A1 853946

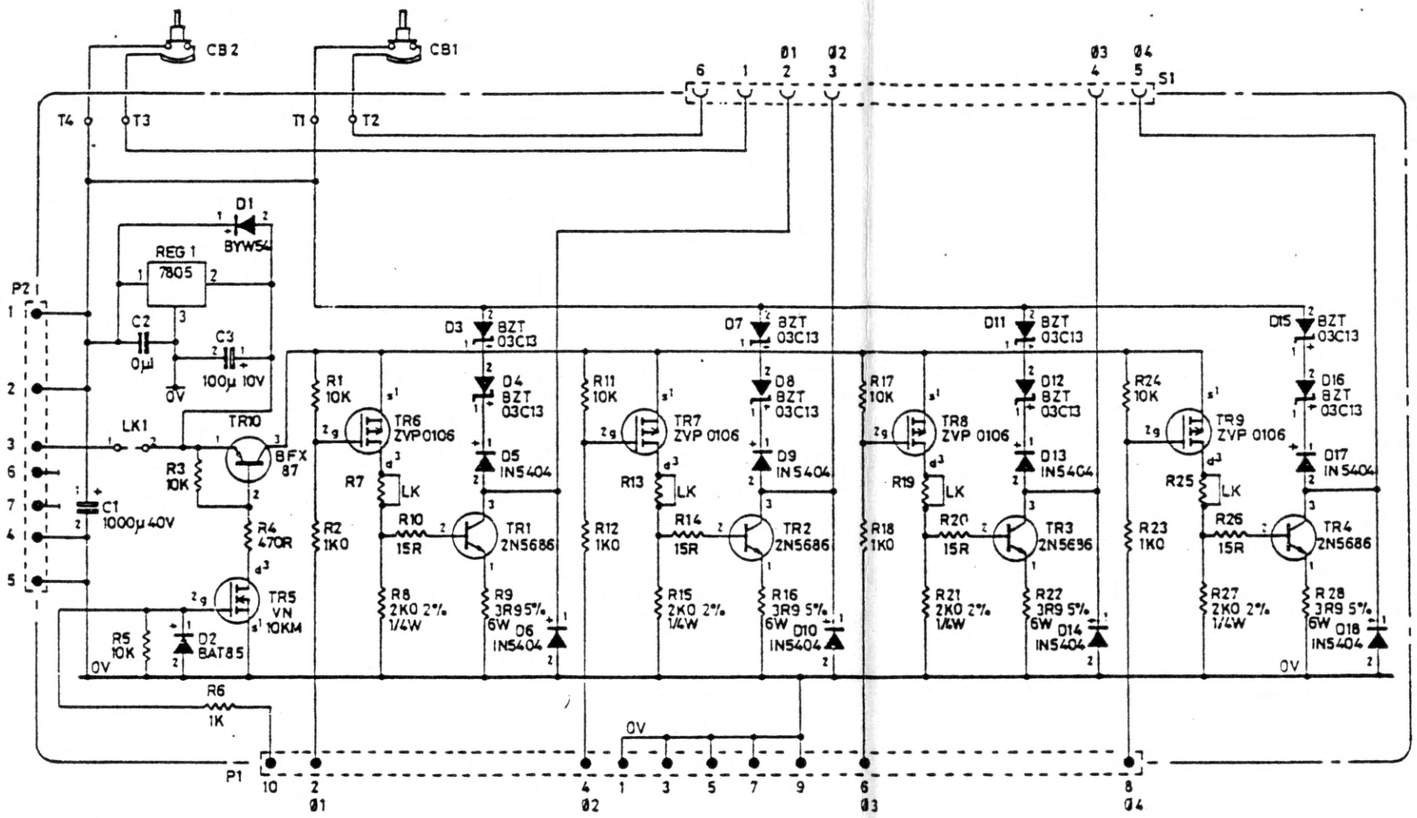

NOTES

1. Circuit Diagram is for One Motor only
2. TR1 & TR3 Mounted on Heat Sink
   TR2 & TR4 " " " "
3. R7, R13, R19, R25, Are not fitted, positions Linked across.
4. CB1 & CB2 are mounted on front panel.

© CAMBRIDGE INSTRUMENTS LIMITED 1986.
THIS DRAWING IS THE PROPERTY OF THE CAMBRIDGE INSTRUMENT CO. LTD. GROUP OF COMPANIES WHICH INCLUDE CAMBRIDGE INSTRUMENTS LTD. U.K. CAMBRIDGE INSTRUMENTS GMBH WEST GERMANY. CAMBRIDGE INSTRUMENTS SARL, FRANCE. CAMBRIDGE INSTRUMENTS INC. U.S.A. THIS DRAWING SHALL NOT BE COPIED OR REPRODUCED IN ANY FORM TO THIRD PERSONS WITHOUT WRITTEN PERMISSION FROM CAMBRIDGE INSTRUMENTS LIMITED.
THE U.S.A. THIS DRAWING IS LOANED WITH THE EXPRESSED AGREEMENT THAT THE DRAWING AND INFORMATION THEREIN CONTAINED ARE PROPERTY OF CAMBRIDGE INSTRUMENTS INC. AND WILL NOT BE REPRODUCED, COPIED, OR OTHERWISE DISPOSED OF DIRECTLY AND WILL NOT BE USED IN WHOLE OR IN PART TO ASSIST IN MAKING OR TO FURNISH ANY INFORMATION FOR THE MAKING OF DRAWINGS OR PRINTS OR OTHER REPRODUCTIONS THEREOF OR FOR THE MAKING OF APPARATUS OR PARTS THEREOF EXCEPT UPON WRITTEN PERMISSION OF CAMBRIDGE INSTRUMENTS INC. FIRST OBTAINED SPECIFIC AS TO EACH CASE. THE ACCEPTANCE OF THIS DRAWING WILL BE CONSTRUED AS AN ACCEPTANCE OF THE FOREGOING AGREEMENT.

LAST COMPONENT REF. No.
USED
R28 3 D18
TR10

UNLESS OTHERWISE STATED ALL RESISTORS 22% 0.6 WATT 1% TOLERANCED

TITLE
STEPPER DRIVER
CIRCUIT DIAGRAM

DRN | DATE
APP | DATE
TRACED | DATE
CHKD | DATE 7-10-86

CAMBRIDGE INSTRUMENTS LIMITED

PRODUCT S220, S360 | CODE

CIRCUIT DIAGRAM No. A1-853946 SHT1

90

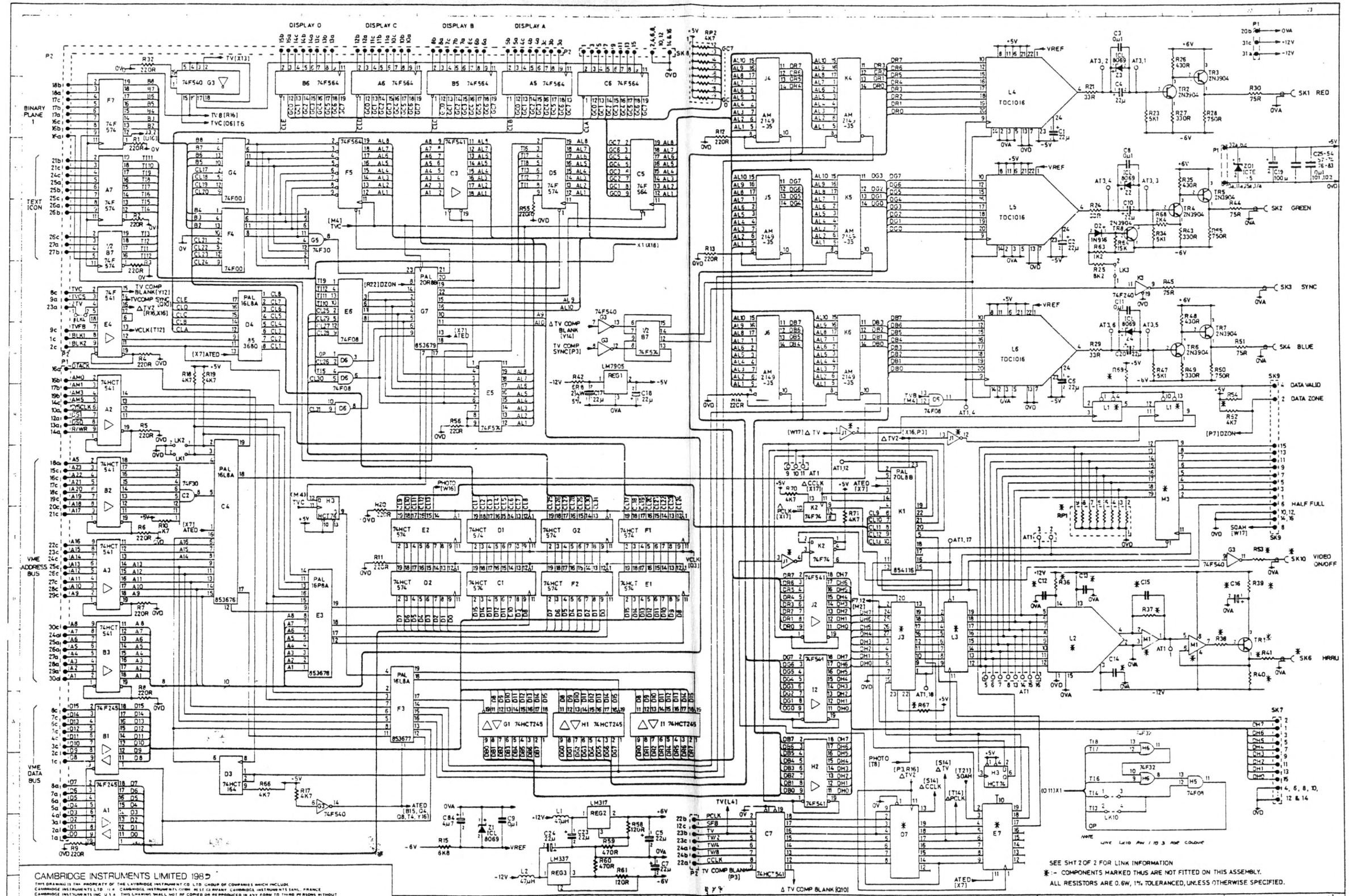
DISPLAY D
DISPLAY C
DISPLAY B
DISPLAY A
BINARY PLANE 1
TEXT ICON
VME ADDRESS BUS
VME DATA BUS
B6 74F564
A6 74F564
B5 74F564
A5 74F564
C6 74F564
74F540 G3
TV[X13]
TV8 [R16]
TVC [06] T6
F7
74F 574
A7
B7
F4
74F00
G4
F5
C3
74F541
D5
C5
74F564
74F 564
G5
74F30
[M4] TVC
X1 [X18]
E4
74F 541
TV COMP BLANK [Y12]
TVCOMP SYNC [Y13]
TV2 [R16,X16]
VCLK [T12]
BLK1
BLKZ
[X7] ATED
PAL 16L8A
D4
B5 3680
P1
DTACK
74HCT 541
A2
B2
R5 220R
LK2
LK1
74F30
C2
PAL 16L8A
C4
A5
A23
A22
A21
A20
A19
A18
A17
R6 220R
R10 4K7
A16
A15
A14
A3
B3
R8 220R
R7 220R
853676
853677
853678
B1
74F 245
A1
R9 220R
D3
74HCT 164
R66 4K7
R17 4K7
74F540
ATED [B15, Q4 Q8, T4, Y16]
PHOTO [W16]
H3
HCT74
R20 220R
R11 220R
E2
D1
G2
F1
D2
C1
F2
E1
PAL 16P8A
E3
PAL 16L8A
F3
G1 74HCT245
H1 74HCT245
I1 74HCT245
PAL 20R8B
G7
853679
[R22] DZON
[X7] ATED
E6
74F08
D6
74F08
E5
74F574
R56 220R
R55 220R
[M4] TVC
R13 220R
R17 220R
R12 220R
R4 220R
R3 220R
R2 220R
R1 220R
R32 220R
TV [X13]
74F540 G3
74F574
74F 574
74F 574
74F

Grid	IC	Description	0V	+5V	Grid	IC	Description	0V	+5V	Grid	IC	Description	0V	+5V
A1	18	74F245	10	20	E1	40	74HCT574	10	20	J1	97	*	7	14
A2	13	74HCT541	10	20	E2	33	74HCT574	10	20	J2	74	74F541	10	20
A3	15	74HCT541	10	20	E3	41	PAL 853678 16P8A	10	20	J3	79	*	14	28
					E4	12	74F541	10	20	J4	54	AM2149-35	9	18
A5	1	74F564	10	20	E5	47	74F574	10	20	J5	56	AM2149-35	9	18
A6	5	74F564	10	20	E6	91	74F08	7	14	J6	58	AM2149-35	9	18
A7	10	74F574	10	20	E7	100	*	10	20					
					F1	39	74HCT574	10	20					
B1	17	74F245	10	20	F2	38	74HCT574	10	20	K1	88	PAL 854116 20L8B	12	24
B2	14	74HCT541	10	20	F3	43	PAL 853677 16L8A	10	20	K2	94	74F74	7	14
B3	16	74HCT541	10	20	F4	20	74F00	7	14	K3	95	74F240	10	20
					F5	46	74F564	10	20	K4	55	AM2149-35	9	18
B5	3	74F564	10	20	F7	9	74F574	10	20	K5	57	AM2149-35	9	18
B6	7	74F564	10	20	G1	64	74HCT245	10	20	K6	59	AM2149-35	9	18
B7	11	74F574	10	20	G2	37	74HCT574	10	20	L1	96	*	7	14
					G3	93	74F540	10	20	L2	80	*	as cct	
C1	36	74HCT574	10	20	G4	19	74F00	7	14	L3	78	*	10	20
C2	28	74F30	7	14	G5	21	74F30	7	14	L4	67	TDC 1016	7	6
C3	48	74F541	10	20	G7	44	PAL 853679 20R8-B	12	24	L5	69	TDC 1016	7	6
C4	29	PAL 853676 16L8A	10	20						L6	71	TDC 1016	7	6
C5	45	74F564	10	20	H6	101	74F32	7	14					
C6	83	74F564	10	20	H1	63	74HCT245	10	20	M1	81	*	as cct	
C7	98	74HCT541	10	20	H2	76	74F541	10	20					
					H3	2	74HCT74	7	14	M3	90	*	10	20
D1	35	74HCT574	10	20	H5	102	74F08	7	14					
D2	34	74HCT574	10	20	I1	62	74HCT245	10	20					
D3	30	74HCT164	7	14	I2	75	74F541	10	20					
D4	85	PAL 853680 16L8A	10	20										
D5	86	74F574	10	20										
D6	92	74F08	7	14										
D7	99	*	10	20										

*: - COMPONENTS MARKED THUS ARE NOT FITTED ON THIS ASSEMBLY

LINK INFORMATION

LK1 NORMALLY FITTED, REMOVED ONLY WHEN BOARD SUPPLIED AS SECOND COLOUR OPTION

LK2 MUST NOT BE FITTED ON THIS ASSEMBLY

LK3 MUST BE FITTED FOR COMPOSITE VIDEO/SYNC. SIGNAL IN GREEN CHANNEL

LK4 MUST NOT BE FITTED ON THIS ASSEMBLY

© CAMBRIDGE INSTRUMENTS LIMITED 198.
THIS DRAWING IS THE PROPERTY OF THE CAMBRIDGE INSTRUMENT CO. LTD. GROUP OF COMPANIES WHICH INCLUDE CAMBRIDGE INSTRUMENTS LTD. U.K. CAMBRIDGE INSTRUMENTS GMBH W. GERMANY CAMBRIDGE INSTRUMENTS SARL FRANCE CAMBRIDGE INSTRUMENTS INC. U.S.A. THIS DRAWING SHALL NOT BE COPIED OR REPRODUCED IN ANY FORM TO THIRD PERSONS WITHOUT WRITTEN PERMISSION FROM CAMBRIDGE INSTRUMENTS LIMITED
IN THE U.S.A. THIS DRAWING IS LOANED WITH THE EXPRESSED AGREEMENT THAT THE DRAWING AND INFORMATION THEREIN CONTAINED ARE THE PROPERTY OF CAMBRIDGE INSTRUMENTS INC. AND WILL NOT BE REPRODUCED COPIED OR OTHERWISE DISPOSED OF DIRECTLY AND WILL NOT BE USED IN WHOLE OR IN PART TO ASSIST IN MAKING OR TO FURNISH ANY INFORMATION FOR THE MAKING OF DRAWINGS OR PRINTS OR OTHER REPRODUCTIONS THEREOF OR FOR THE MAKING OF APPARATUS OR PARTS THEREOF EXCEPT UPON WRITTEN PERMISSION OF CAMBRIDGE INSTRUMENTS INC. FIRST OBTAINED SPECIAL AS TO EACH CASE. THE ACCEPTANCE OF THIS DRAWING WILL BE CONSTRUED AS AN ACCEPTANCE OF THE FOREGOING AGREEMENT.

			PCD
			ENG
			PCA

TITLE: COLOUR MIXER CIRCUIT DIAGRAM

DRN | DATE
CHK | DATE
ENG | DATE
PCA | DATE
APP | 9.87

CAMBRIDGE INSTRUMENTS LIMITED

SIZE A3 | DRG. NO. S360 | ISSUE

CIRCUIT DIAGRAM No. A1-855108
SHT.1 2 of 2

92

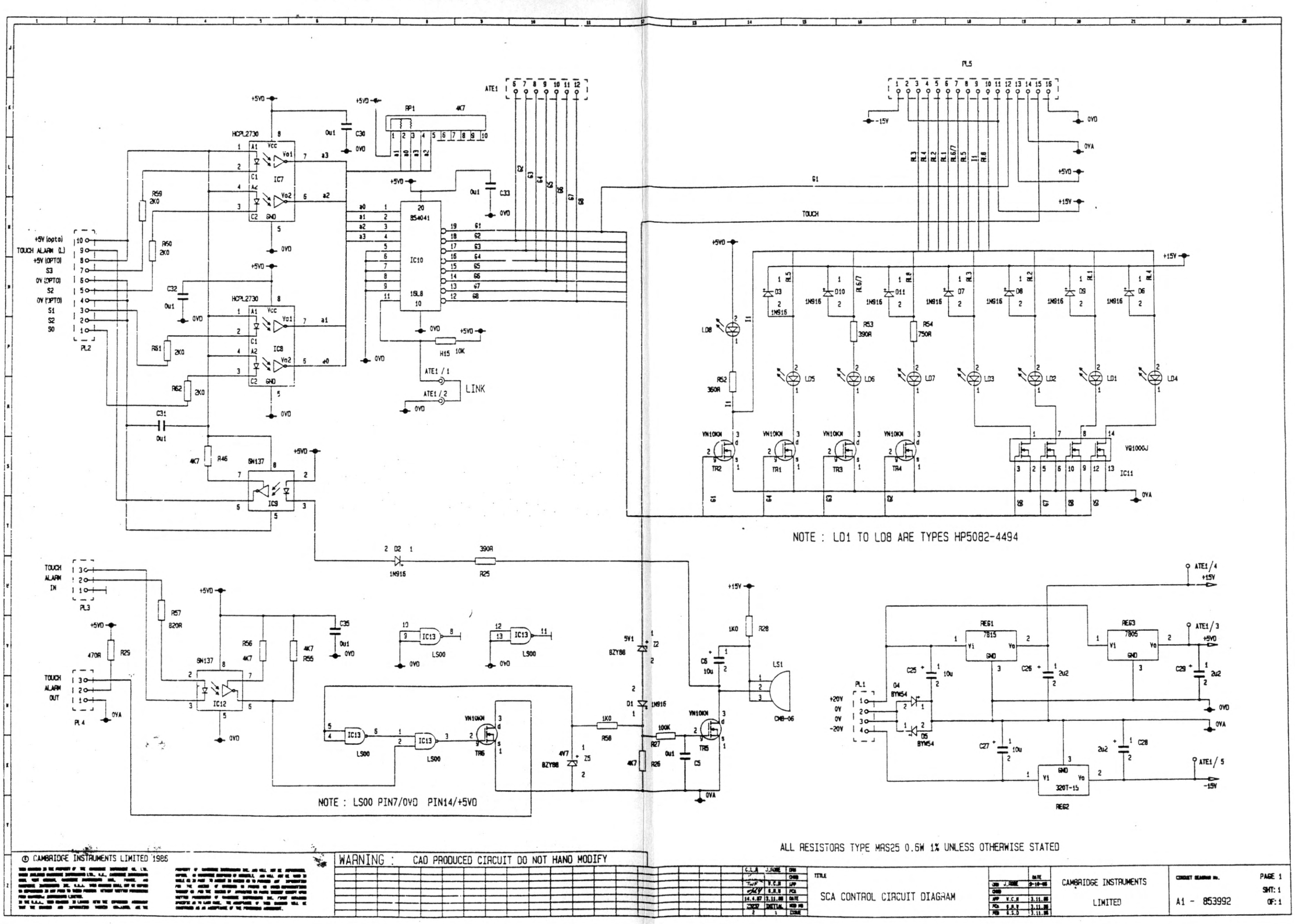

NOTE : LD1 TO LD8 ARE TYPES HP5082-4494
NOTE : LS00 PIN7/0VD PIN14/+5VD
ALL RESISTORS TYPE MRS25 0.6W 1% UNLESS OTHERWISE STATED
© CAMBRIDGE INSTRUMENTS LIMITED 1986
WARNING : CAD PRODUCED CIRCUIT DO NOT HAND MODIFY
TITLE
SCA CONTROL CIRCUIT DIAGRAM
CAMBRIDGE INSTRUMENTS
LIMITED
A1 - 853992
PAGE 1
SHT: 1
OF: 1

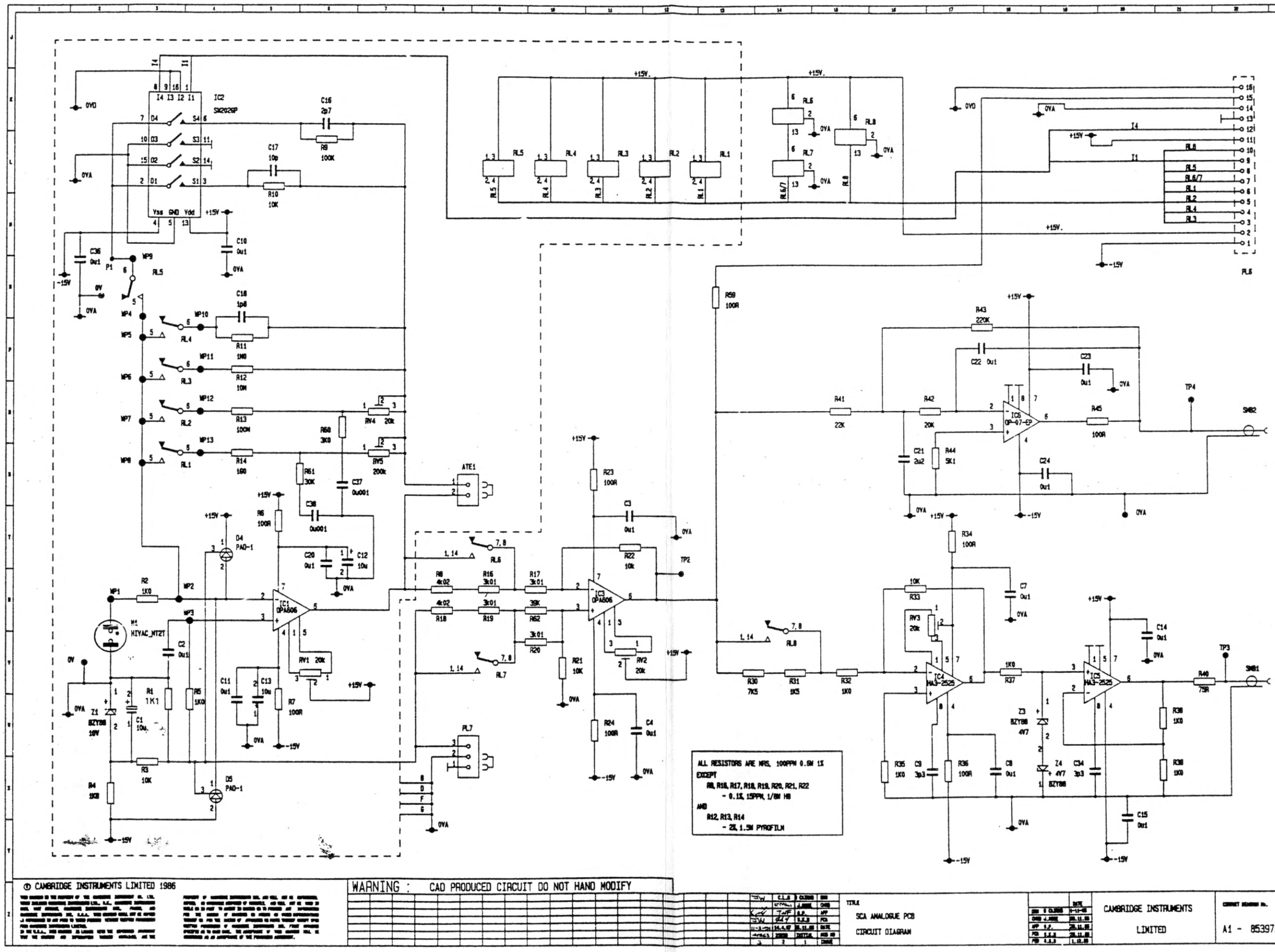

© CAMBRIDGE INSTRUMENTS LIMITED 1986

WARNING : CAD PRODUCED CIRCUIT DO NOT HAND MODIFY

TITLE
SCA ANALOGUE PCB
CIRCUIT DIAGRAM

CAMBRIDGE INSTRUMENTS LIMITED

A1 - 853972

PAGE 1
OF: 1
SHT: 1

94

DRAWING No.
A2-852207

USED ON
704669

PROJECTION

AMEND/MOD	INIT-IALS	DATE	ISSUE
PROD ISSUE		28/4/80	1

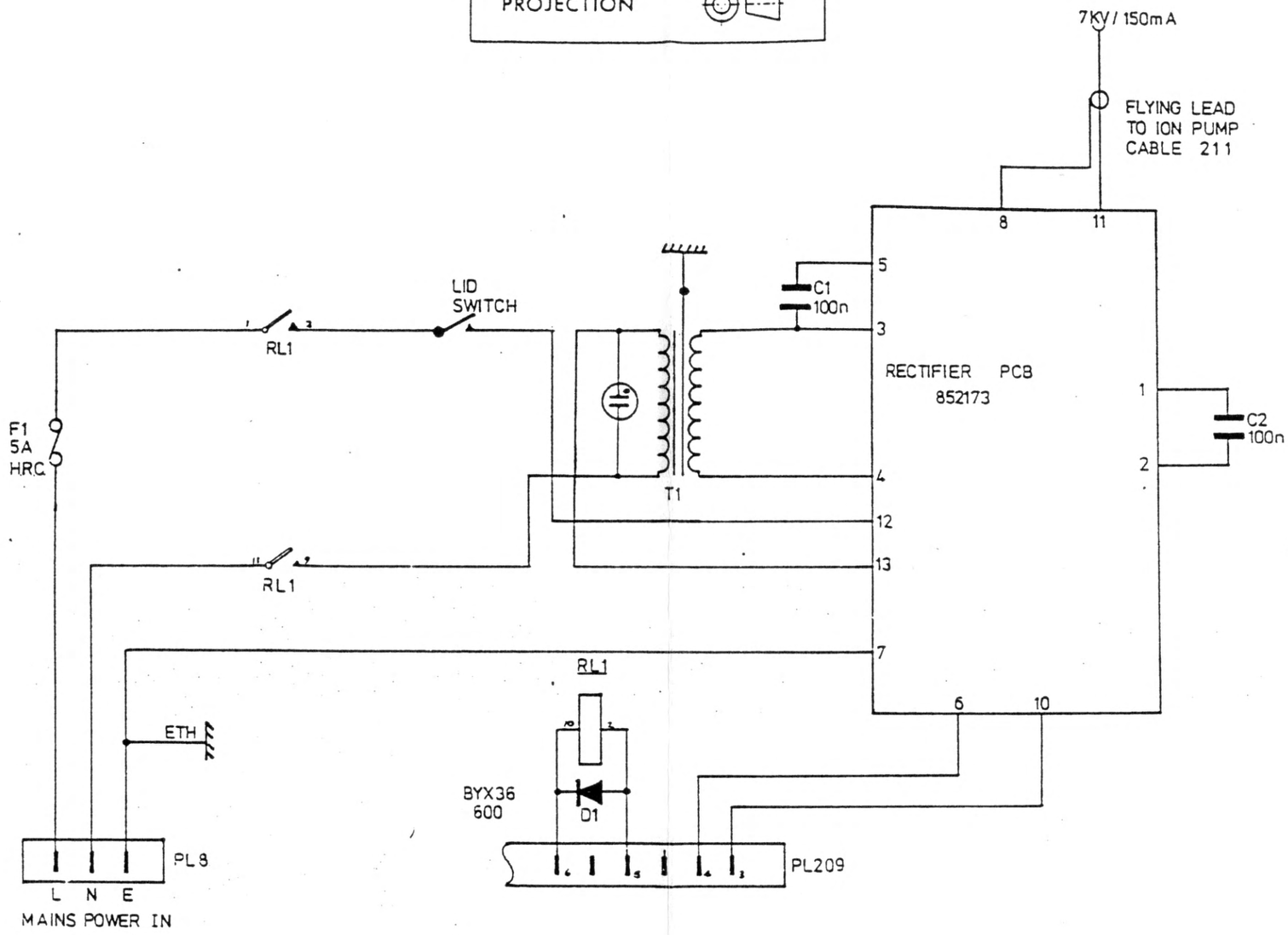

© THE CAMBRIDGE INSTRUMENT CO. LTD. 197...

0 INCHES 1
0 1/2 20 30
mm

THIS DRAWING CONFORMS TO B.S.308:1972

REMOVE BURRS FROM SHARP EDGES AND CORNERS
USING R.A.D. MAX.

CONFIDENTIAL
This document is the property of The Cambridge Instrument Company. Its contents must not be copied or communicated to a third party without written permission.

MATERIAL:

PROTECTIVE FINISH

TOLERANCES (UNLESS OTHERWISE STATED)
DECIMAL ±
FRACTIONS & WHOLE NUMBERS ±
ANGULAR ±

DIMENSIONS IN UNLESS OTHERWISE STATED

SURFACE ROUGHNESS: UNLESS OTHERWISE STATED

DRAWN	DESIGN ENG. CKD.	PROD. CHKD:	APPROVED:
S.A.	JP		
DATE 22/4/80	DATE 28/4/80	DATE	DATE

SCALE:

THE CAMBRIDGE INSTRUMENT COMPANY GROUP OF COMPANIES
THE CAMBRIDGE INSTRUMENT COMPANY
CAMBRIDGE ENGLAND

TITLE
S250 ION PUMP OVERALL CIRCUIT

DRAWING No.
A2-852201

ISSUE

SIZE A2

95

DRAWING No.
A2 852173 SHT1

USED ON
70447

PROJECTION

AMENDMENTS	INITIALS	DATE	ISSUE
		19/3/79	1/1
Ands T & 11122	JMW	2/6/80	2/2
10185			
CN/50687	CJW	9/2/82	3/2
17998	[illegible]	1.5.84	2
19960 20838	[illegible]	2-6-86	3
22450	SKH	1-6-87	3A
25453	[illegible]	1-12-88	4
25488	[illegible]	[illegible]	5

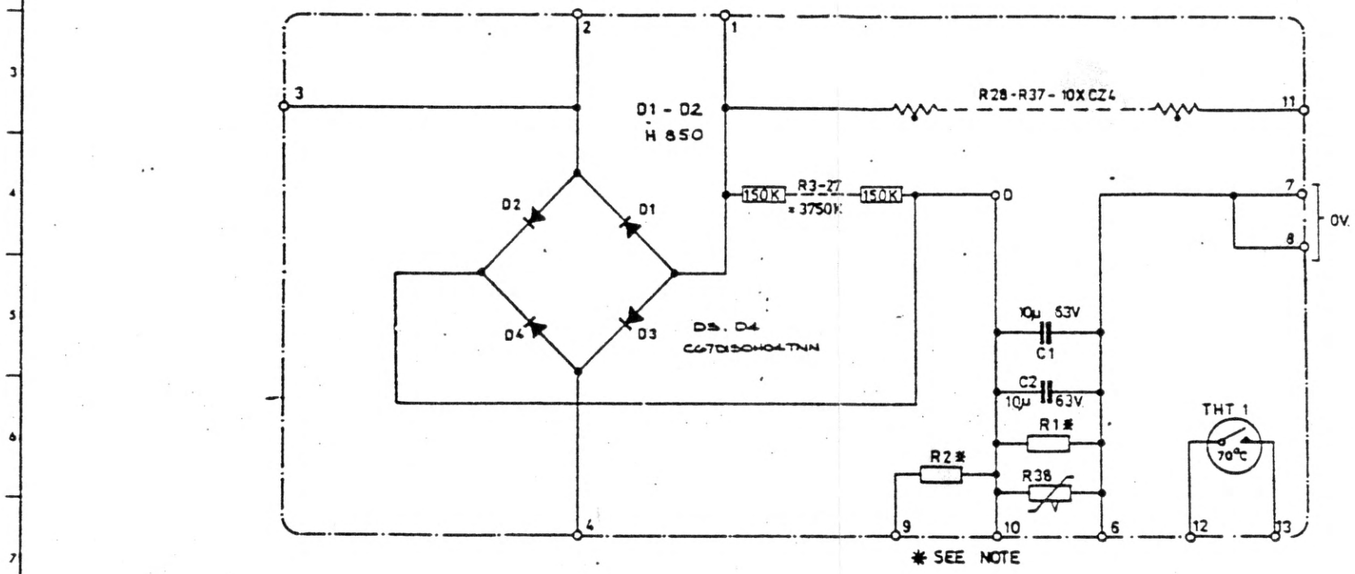

NOTE:-
FOR S200
R1 = 200R
R2 - NOT FITTED
FOR EBMF
R1 = 120R
R2 = 5M6

5360 FE = 4,746Ω ?

© THE CAMBRIDGE INSTRUMENT CO LTD. 197...

0 INCHES 1
0 10 20 30
mm

THIS DRAWING CONFORMS TO B.S. 308: 1972
REMOVE BURRS FROM SHARP EDGES AND CORNERS
USING R.A.Q. MAX.

CONFIDENTIAL
This document is the property of The Cambridge Instrument Company. Its contents must not be copied or communicated to a third party without written permission.

MATERIAL:

PROTECTIVE FINISH

TOLERANCES: unless otherwise stated
DECIMAL ±
FRACTIONS & WHOLE NUMBERS ±
ANGULAR ±

DIMENSIONS IN unless otherwise stated

SURFACE ROUGHNESS: unless otherwise stated

DRAWN: [illegible] Date 1.3.80
DESIGN ENG. CK'D. unless otherwise stated
PROD. CHK'D: Date
APPROVED: Date
SCALE:

THE CAMBRIDGE INSTRUMENT COMPANY GROUP OF COMPANIES
THE CAMBRIDGE INSTRUMENT COMPANY
CAMBRIDGE ENGLAND

TITLE ION PUMP RECTIFIER HIGH VOLTAGE SUPPLY

DRAWING No. A2 852173 SHT1.

ISSUE

SIZE A2

HELIX

DRAWING No.
AC-910830

USED ON
719703

PROJECTION

AMENDMENTS	INITIALS	DATE	ISSUE
ORIG ISSUE	CM	JAN-91	1

HEATER POWER
N E L
SKT 83

ON
HEATERS - SW1
ON

LID SWITCH

RL1

F1
5A
HRC

RL1

RL1

ETH

BYX36
n00
D1

FL82
L N E
MAINS POWER IN

CABLE 208

7KV / 150mA

FLYING LEAD
TO ION PUMP
CABLE 211

8 11

5
3
4
12
13
7
5 10

C1
100n

RECTIFIER PCB
852173

C2
100n

T1

MONITOR
GUN
BK R

MONITOR
COLUMN
BK R

7 6 5 4 3 2 1
SKT. 81

TO COLUMN ION
PUMP SUPPLY

© THE CAMBRIDGE INSTRUMENT CO LTD 1991

0 INCHES 1
0 10 20 30
mm

THIS DRAWING CONFORMS TO B.S. 308: 1972

REMOVE BURRS FROM SHARP EDGES AND CORNERS
USING RAD. MAX.

CONFIDENTIAL
This document is the property of The Cambridge Instrument Company. Its contents must not be copied or communicated to a third party without written permission.

MATERIAL:

PROTECTIVE FINISH

TOLERANCES UNLESS OTHERWISE STATED
DECIMAL ±
FRACTIONS & WHOLE NUMBERS ±
ANGULAR ±

DIMENSIONS IN UNLESS OTHERWISE STATED

SURFACE ROUGHNESS UNLESS OTHERWISE STATED

DRAWN: G MARTIN	DESIGN ENG. CK'D	PROD. CH'KD:	APPROVED	SCALE:
DATE JAN-91	DATE 30.1.91 WJS	DATE	DATE	

THE CAMBRIDGE INSTRUMENT COMPANY GROUP OF COMPANIES
THE CAMBRIDGE INSTRUMENT COMPANY
CAMBRIDGE ENGLAND

TITLE 5360 ION PUMP SUPPLY UNIT 'A'
OVERALL CIRCUIT DIAGRAM

DRAWING No. A2-910830

ISSUE

MY 90059 # A SIZE A2

DRAWING No.
A2-717747

USED ON
S360 714956

PROJECTION

AMEND/MOD.	INITIALS	DATE	
ORIGINAL	AJL	Dec 86	
31034	CB	5-5-87	2
23680	AJL	24.6.87	3
25871	GM	2-3-89	4

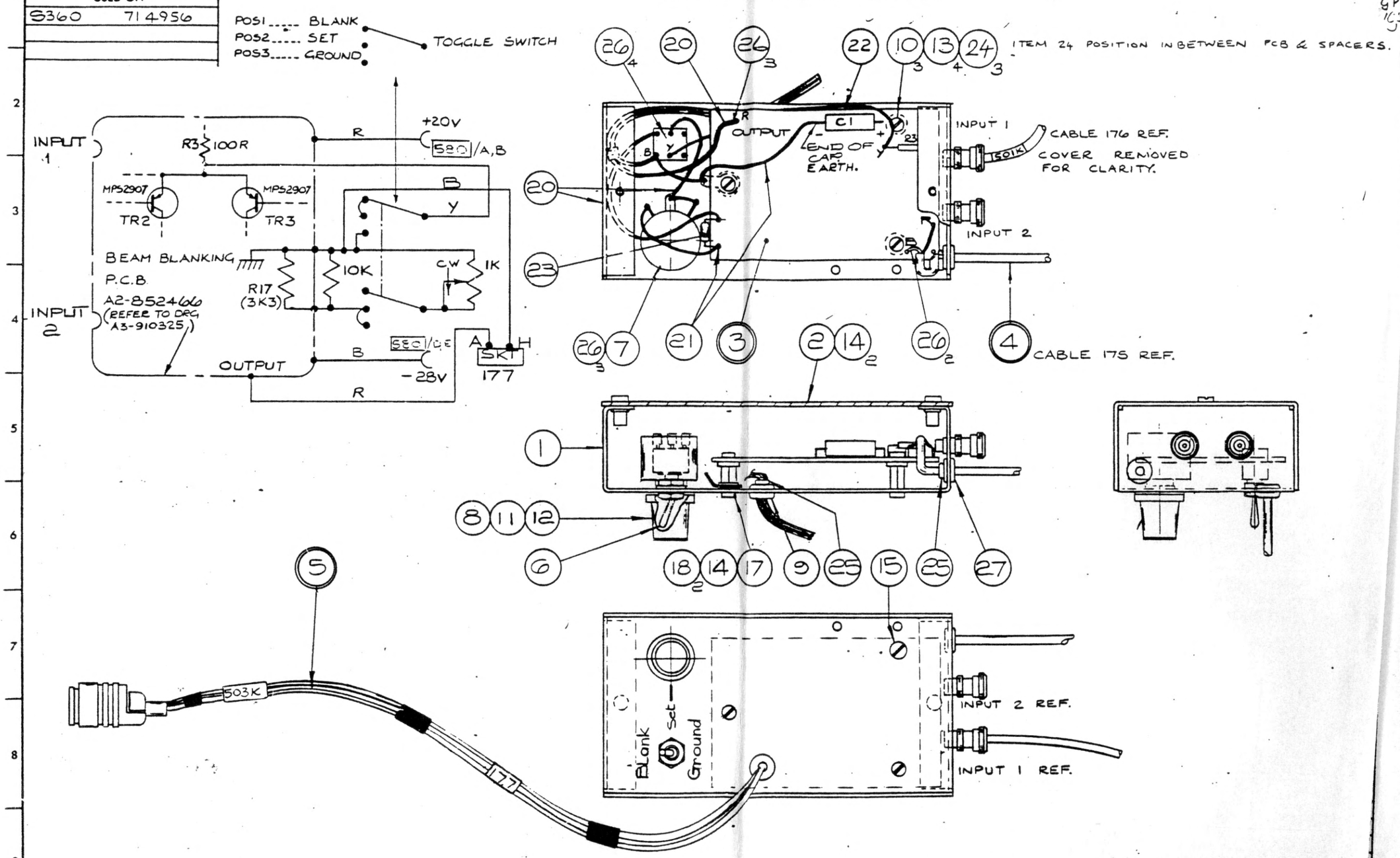

SIMILAR TO A2-717115

© CAMBRIDGE INSTRUMENTS LTD. 1986.

0 INCHES 1
0 10 20 30
mm

THIS DRAWING CONFORMS TO B.S.308:1972
REMOVE BURRS FROM SHARP EDGES AND CORNERS
USING.....RAD. MAX.

CONFIDENTIAL
This document is the property of Cambridge Instruments Ltd
Its contents must not be copied or communicated to a third party without written permission.

MATERIAL: SEE P/L 717747
PROTECTIVE FINISH

TOLERANCES (UNLESS OTHERWISE STATED)
DECIMAL ±
FRACTIONS & WHOLE NUMBER ±
ANGULAR ±
DIMENSIONS IN UNLESS OTHERWISE STATED
SURFACE ROUGHNESS: UNLESS OTHERWISE STATED

DRAWN: A.J.L DATE 23-12-86
DESIGN ENG.CKD. DATE
PROD. CHKD: DATE
APPROVED: DATE

CAMBRIDGE INSTRUMENTS LTD.

TITLE BEAM BLANKING (S360) CONTROL BOX ASSY.

SCALE:
DRAWING A717747
ISSUE
SIZE A2

HARPER AND TUNSTALL LIMITED

105

DRAWING No.
A2 852466 SH.1

USED ON
A3 – 21005

PROJECTION

PCA	PED	ENG	AMEND/MCO.	INIT. IALS	DATE	ISSUE
					10-5-82	1
			11610		[illegible]	[illegible]
JW	MJ		17072	JW	10-7-90	3

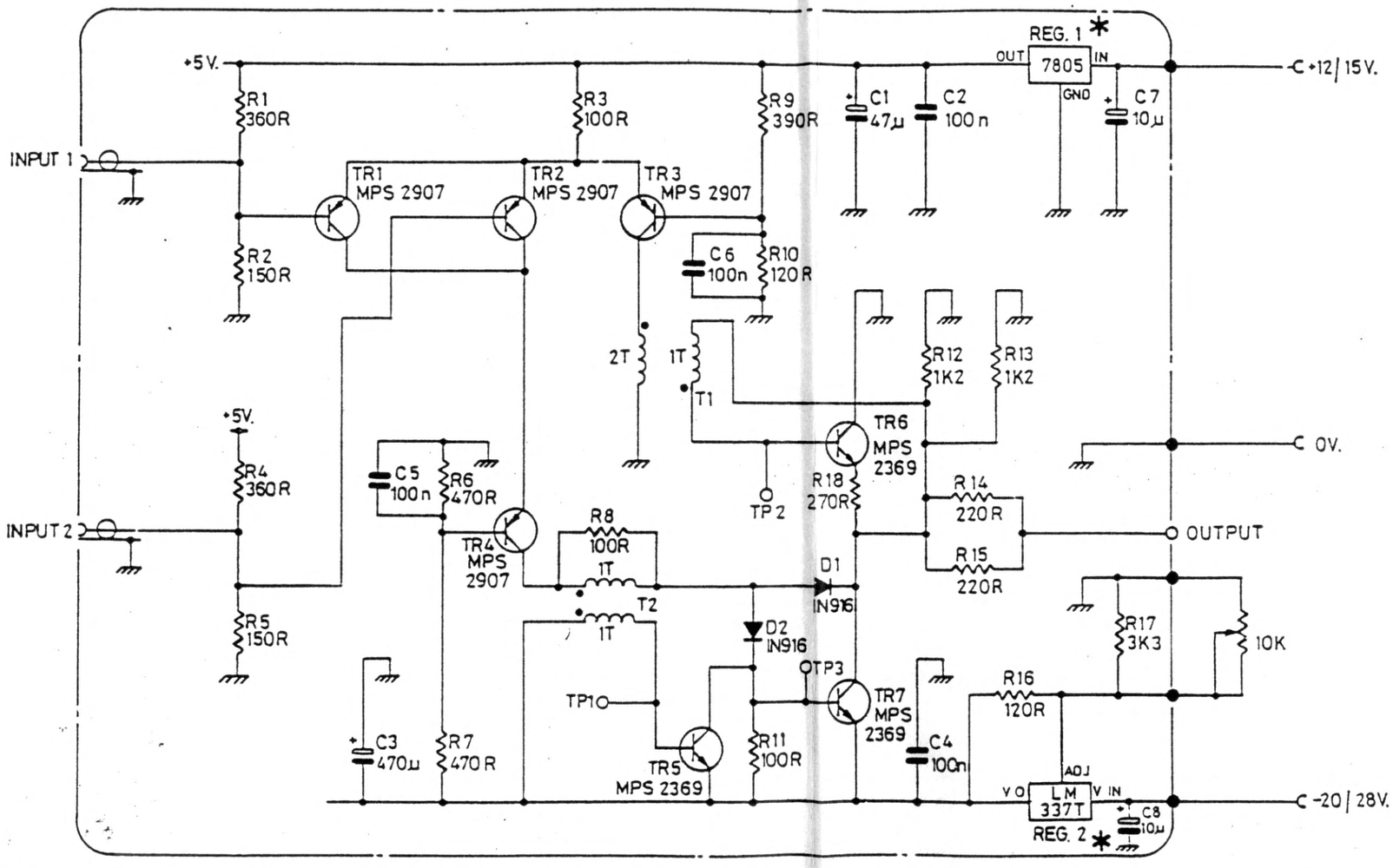

* FITTED WITH HEATSINK

LAST REF. Nos. USED:

R 17
D 2
TR 7
C 8
T 2
REG. 2

0 INCHES 1
0 10 20 30
mm

THIS DRAWING CONFORMS TO B.S.308:1972
REMOVE BURRS FROM SHARP EDGES AND CORNERS
USING..... .....RAD. MAX.

© THE CAMBRIDGE INSTRUMENT CO. LTD. 1982.

CONFIDENTIAL
This document is the property of The Cambridge Instrument Company. Its contents must not be copied or communicated to a third party without written permission.

MATERIAL:

PROTECTIVE FINISH

TRACED: A.G. 19.5.82

TOLERANCES UNLESS OTHERWISE STATED
DECIMAL ±
FRACTIONS & WHOLE NUMBER ±
ANGULAR ±

DIMENSIONS IN UNLESS OTHERWISE STATED

SURFACE ROUGHNESS: UNLESS OTHERWISE STATED

DRAWN: DATE	DESIGN ENG.CKD. DATE	PROD. CHKD: DATE	APPROVED: DATE	SCALE:

THE CAMBRIDGE INSTRUMENT GROUP OF COMPANIES
THE CAMBRIDGE INSTRUMENT COMPANY LTD.
CAMBRIDGE, ENGLAND.

TITLE
S100 BEAM BLANKING P.C.B.

DRAWING No.
A2 852466
SHEET 1

ISSUE

SIZE A2

106

CIRCUIT DIAGRAM No.
A1 - 855380
SHEET 1 PAGE 1 OF 4

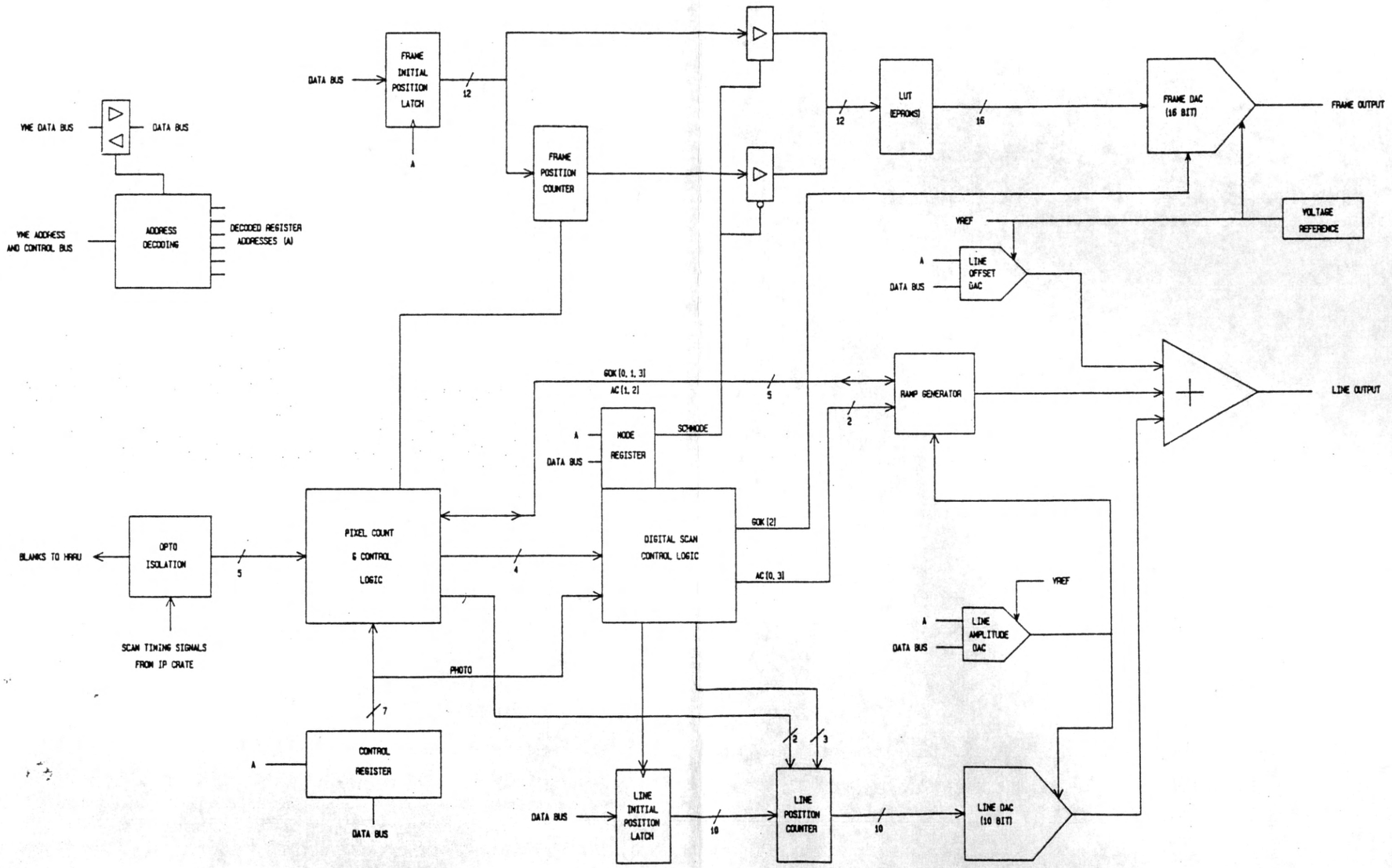

© CAMBRIDGE INSTRUMENTS 1990

WARNING: METHEUS CAD DRAWING. DO NOT HAND MODIFY

TITLE
S360 SCAN GENERATOR

CAMBRIDGE INSTRUMENTS LIMITED

CIRCUIT DIAGRAM No.
A1 - 855380
SHEET 1 PAGE 1 OF 4

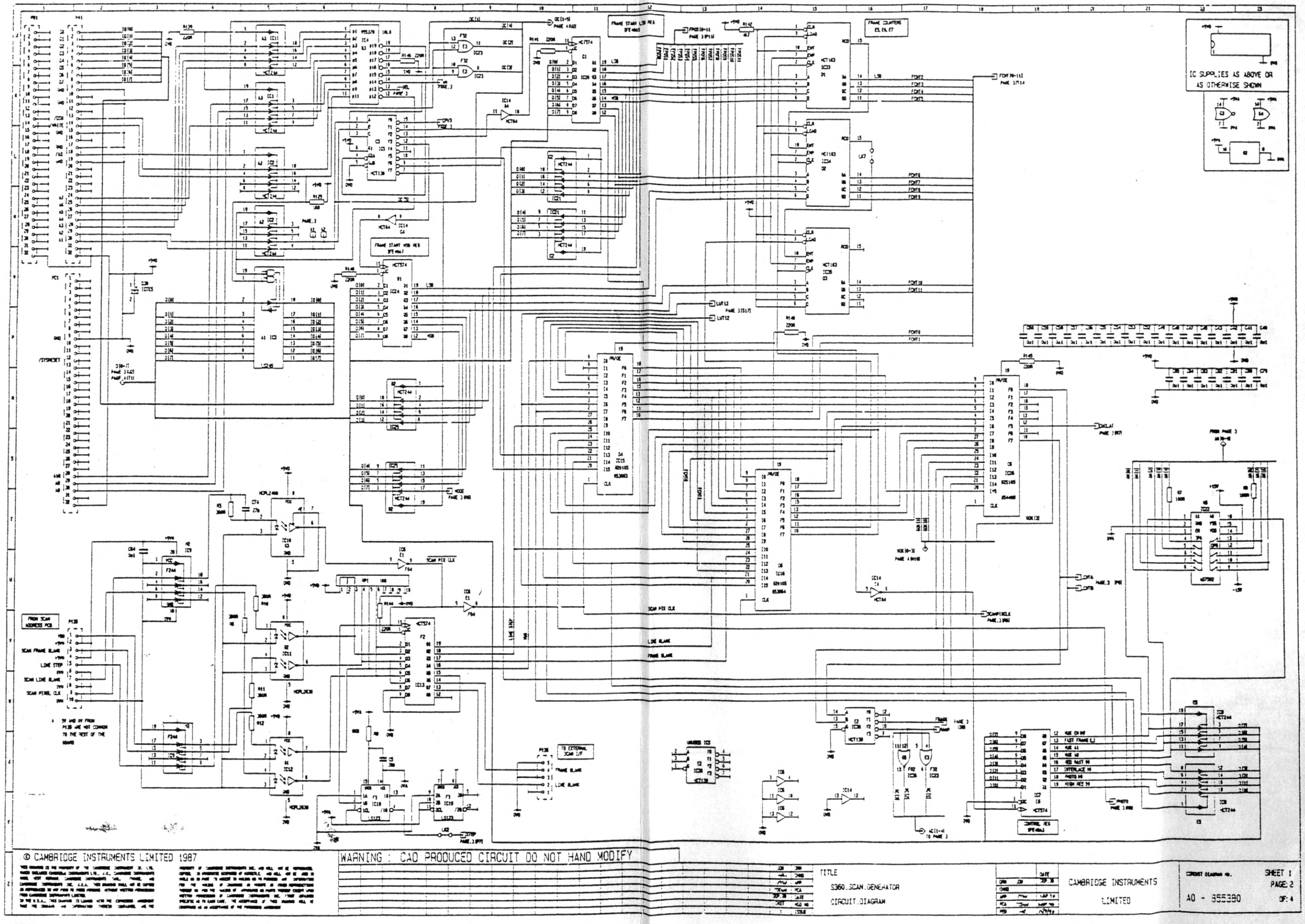

© CAMBRIDGE INSTRUMENTS LIMITED 1987

WARNING : CAD PRODUCED CIRCUIT DO NOT HAND MODIFY

TITLE	S360.SCAN.GENERATOR CIRCUIT.DIAGRAM
	CAMBRIDGE INSTRUMENTS LIMITED
CIRCUIT DIAGRAM NO.	A0 - 355380
SHEET	1
PAGE	2
OF	4

PLANDALE S.M.A.

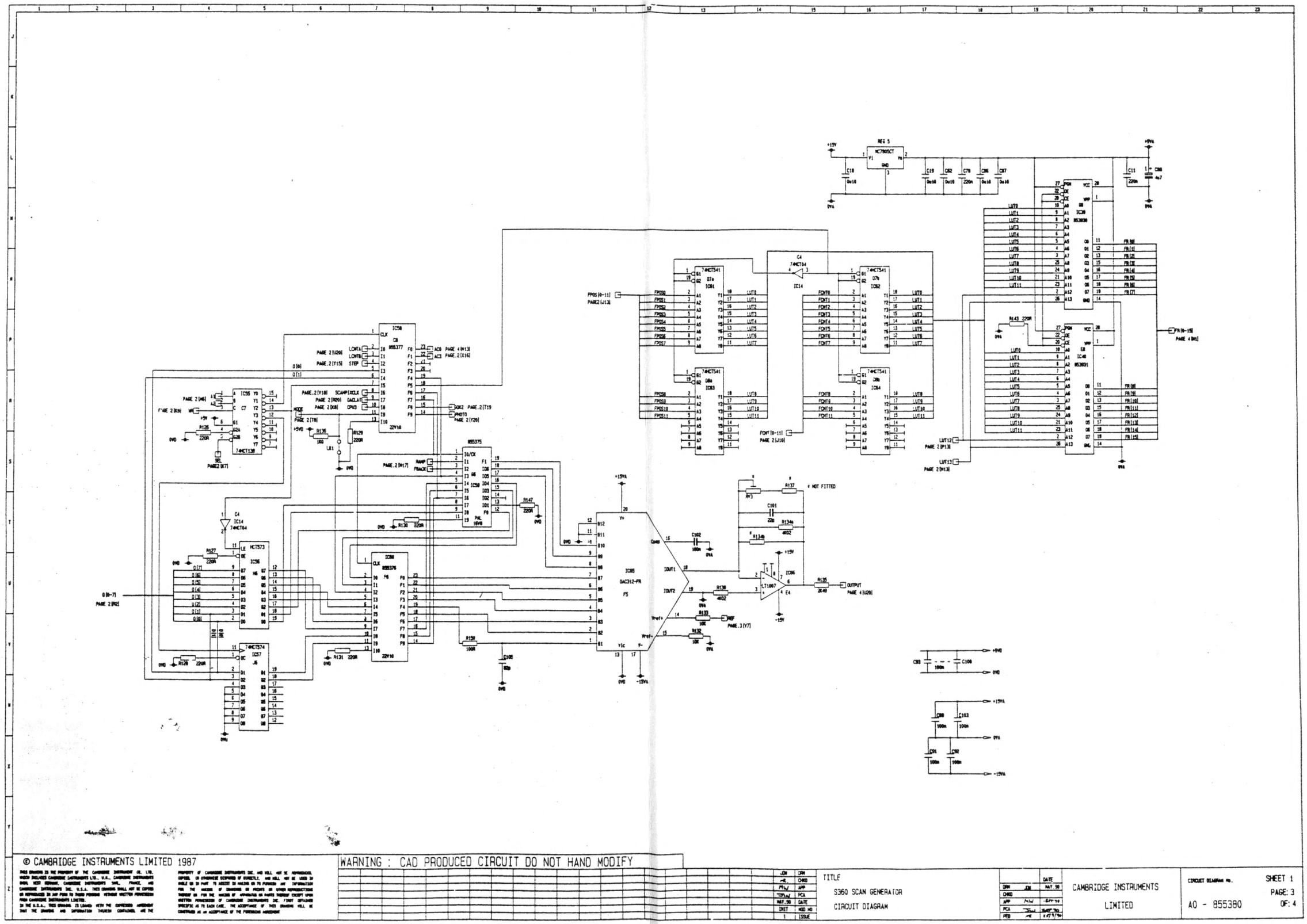

© CAMBRIDGE INSTRUMENTS LIMITED 1987

THIS DRAWING IS THE PROPERTY OF THE CAMBRIDGE INSTRUMENT CO. LTD. WHICH INCLUDES CAMBRIDGE INSTRUMENTS LTD., U.K., CAMBRIDGE INSTRUMENTS OHIO, WEST GERMANY, CAMBRIDGE INSTRUMENTS SAR, FRANCE, AND CAMBRIDGE INSTRUMENTS INC. U.S.A. THIS DRAWING SHALL NOT BE COPIED OR REPRODUCED IN ANY FORM TO THIRD PERSONS WITHOUT WRITTEN PERMISSION FROM CAMBRIDGE INSTRUMENTS LIMITED.
IN THE U.S.A., THIS DRAWING IS LOANED WITH THE EXPRESSED AGREEMENT THAT THE DRAWING AND INFORMATION THEREIN CONTAINED, ARE THE PROPERTY OF CAMBRIDGE INSTRUMENTS INC. AND WILL NOT BE REPRODUCED, COPIED, OR OTHERWISE DISPOSED OF DIRECTLY, AND WILL NOT BE USED IN WHOLE OR IN PART TO ASSIST IN MAKING OR TO FURNISH ANY INFORMATION FOR THE MAKING OF DRAWINGS OR PARTS OR OTHER REPRODUCTIONS THEREOF OR FOR THE MAKING OF APPARATUS OR PARTS THEREOF EXCEPT UPON WRITTEN PERMISSION OF CAMBRIDGE INSTRUMENTS INC. FIRST OBTAINED SPECIFIC AS TO EACH CASE. THE ACCEPTANCE OF THIS DRAWING WILL BE CONSTRUED AS AN ACCEPTANCE OF THE FOREGOING AGREEMENT

WARNING : CAD PRODUCED CIRCUIT DO NOT HAND MODIFY

JDW	DRN
	CHKD
	APP
	PCA
MAY.90	DATE
INIT	MOD NO
1	ISSUE

TITLE

S360 SCAN GENERATOR

CIRCUIT DIAGRAM

		DATE
DRN	JDW	MAY.90
CHKD		
APP		
PCA		
PED		

CAMBRIDGE INSTRUMENTS LIMITED

CIRCUIT DIAGRAM No. A0 - 855380

SHEET 1 PAGE: 3 OF: 4

PLANDALE S.M.A.

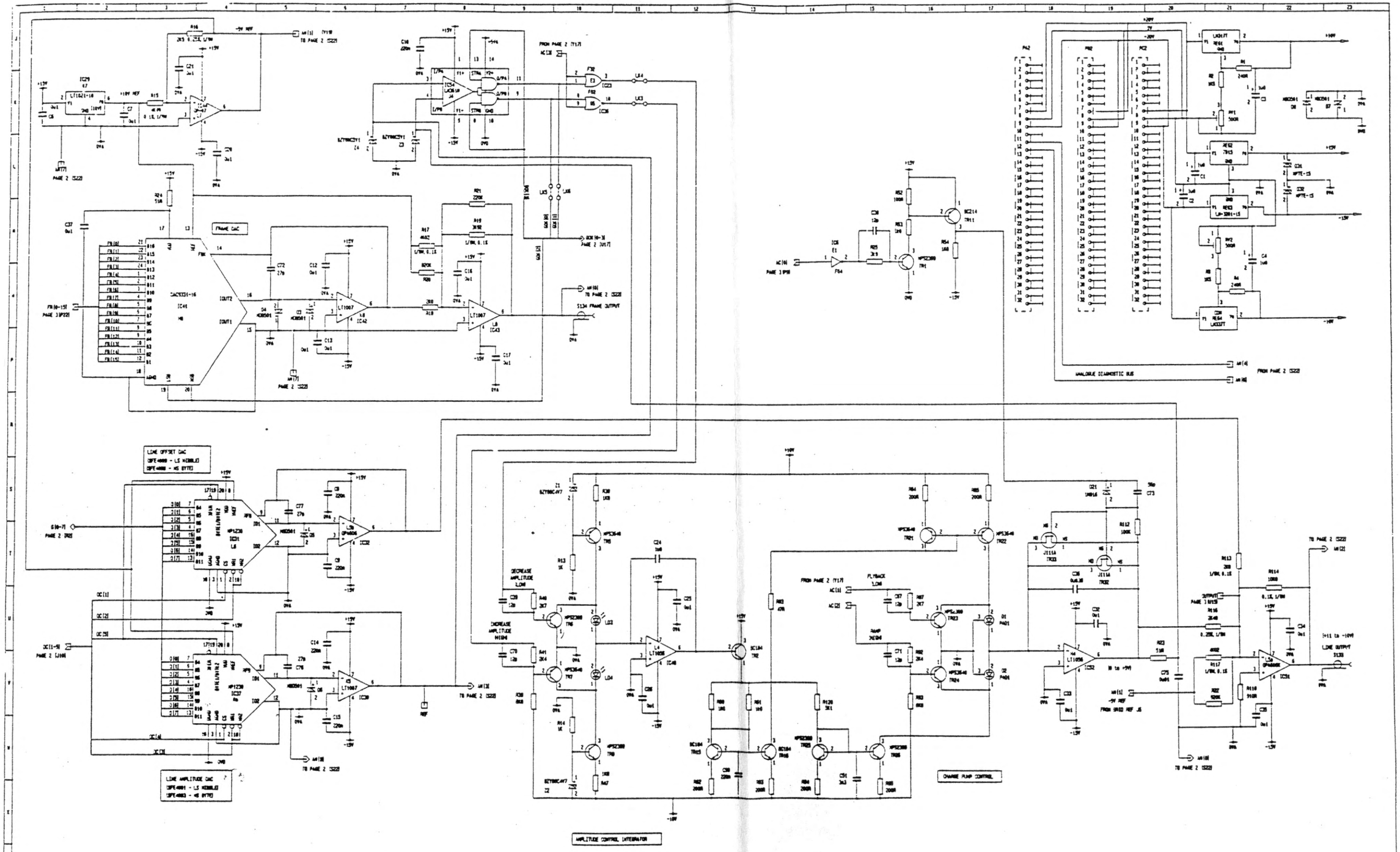
FRAME DAC
LINE OFFSET DAC
LINE AMPLITUDE DAC
AMPLITUDE CONTROL INTEGRATOR
CHARGE PUMP CONTROL
ANALOGUE DIAGNOSTIC BUS
WARNING : CAD PRODUCED CIRCUIT DO NOT HAND MODIFY
© CAMBRIDGE INSTRUMENTS LIMITED 1987
TITLE
5360-SCAN-GENERATOR
CIRCUIT-DIAGRAM
CAMBRIDGE INSTRUMENTS
LIMITED
AO - 855380
SHEET 1
PAGE: 4
OF: 4

111

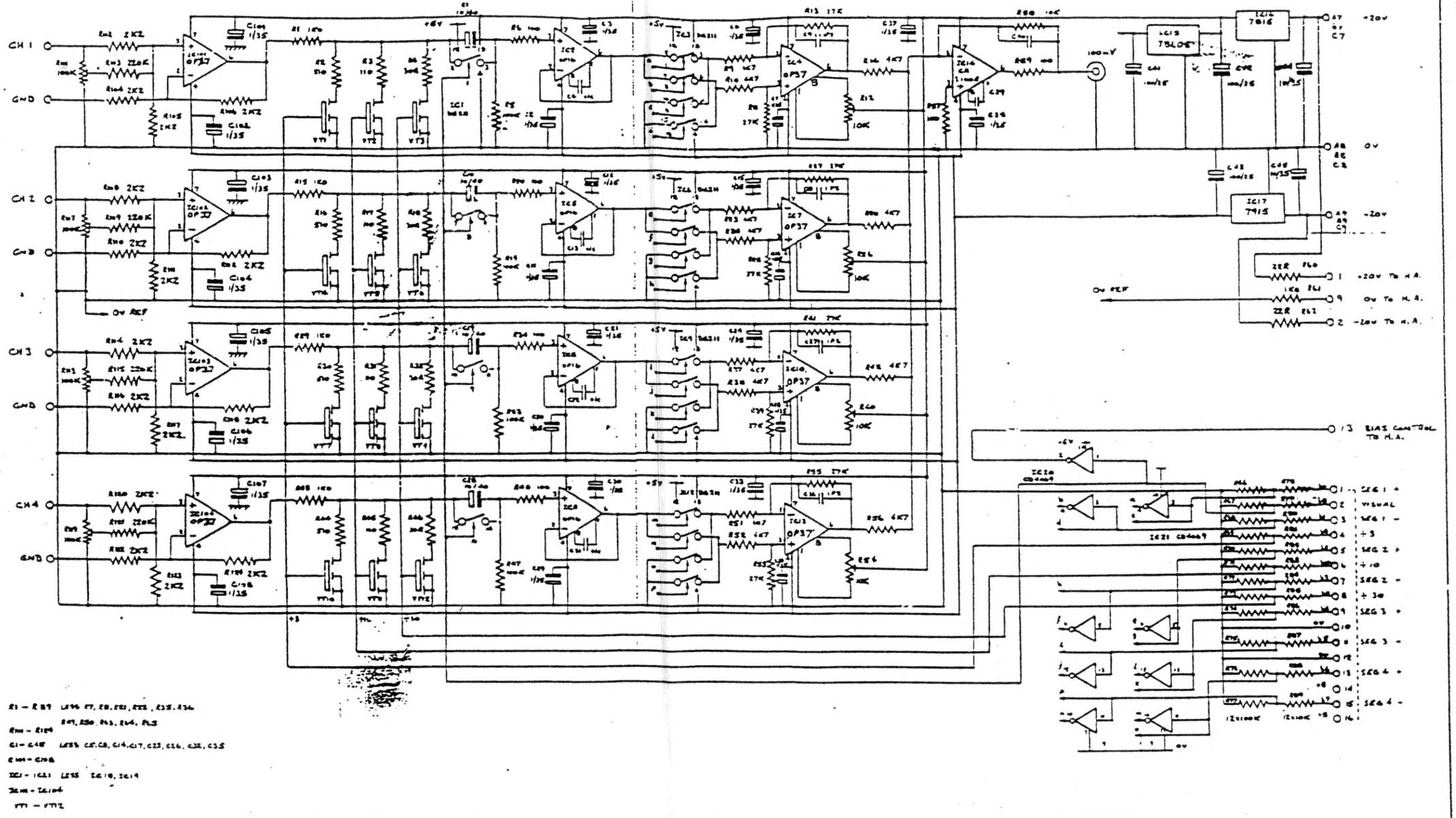

ISSUE 2 23 DEC 86	S360 BACKSCATTERED ELECTRON DETECTOR - MAIN CONTROL BOARD	CD49-10

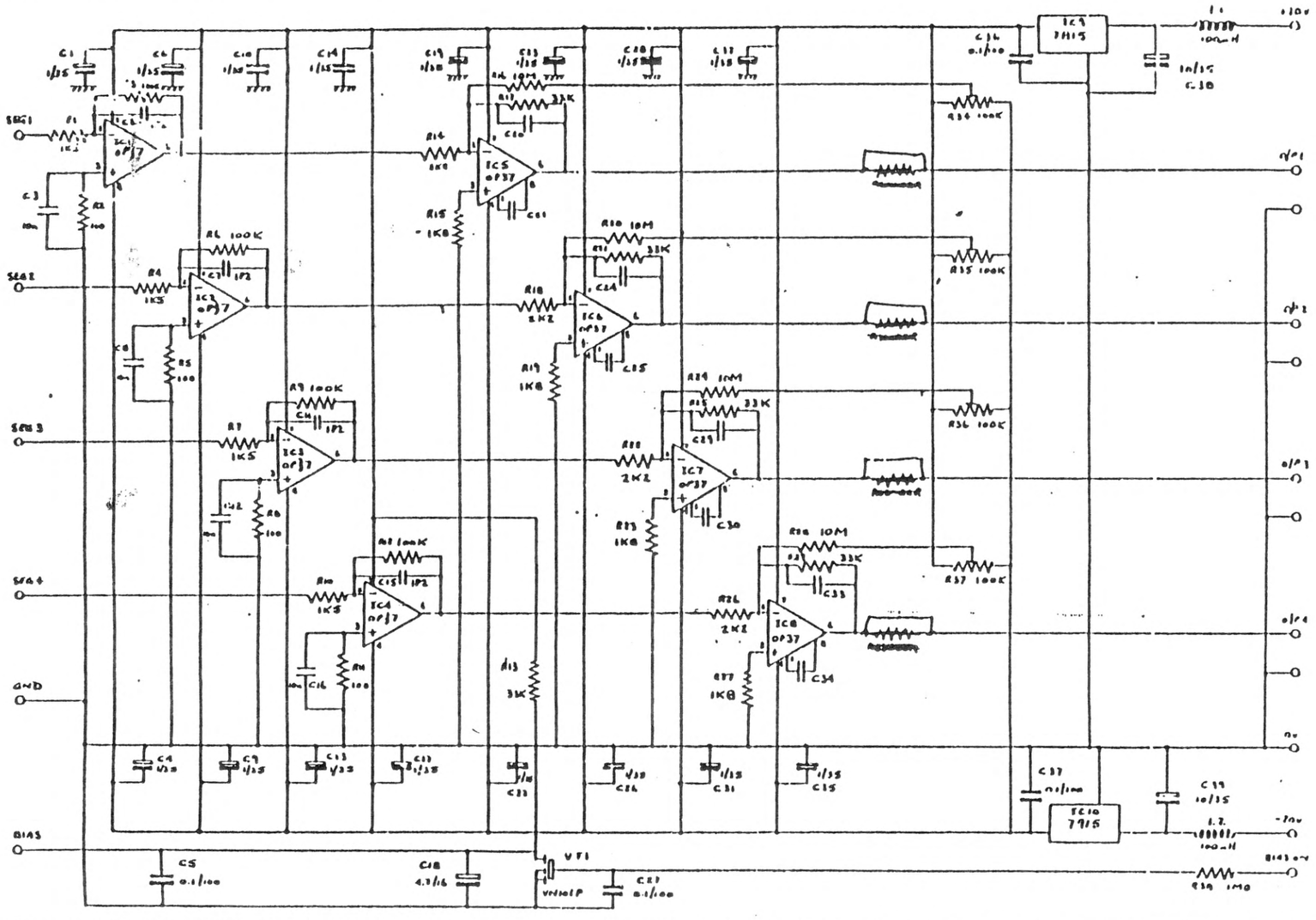

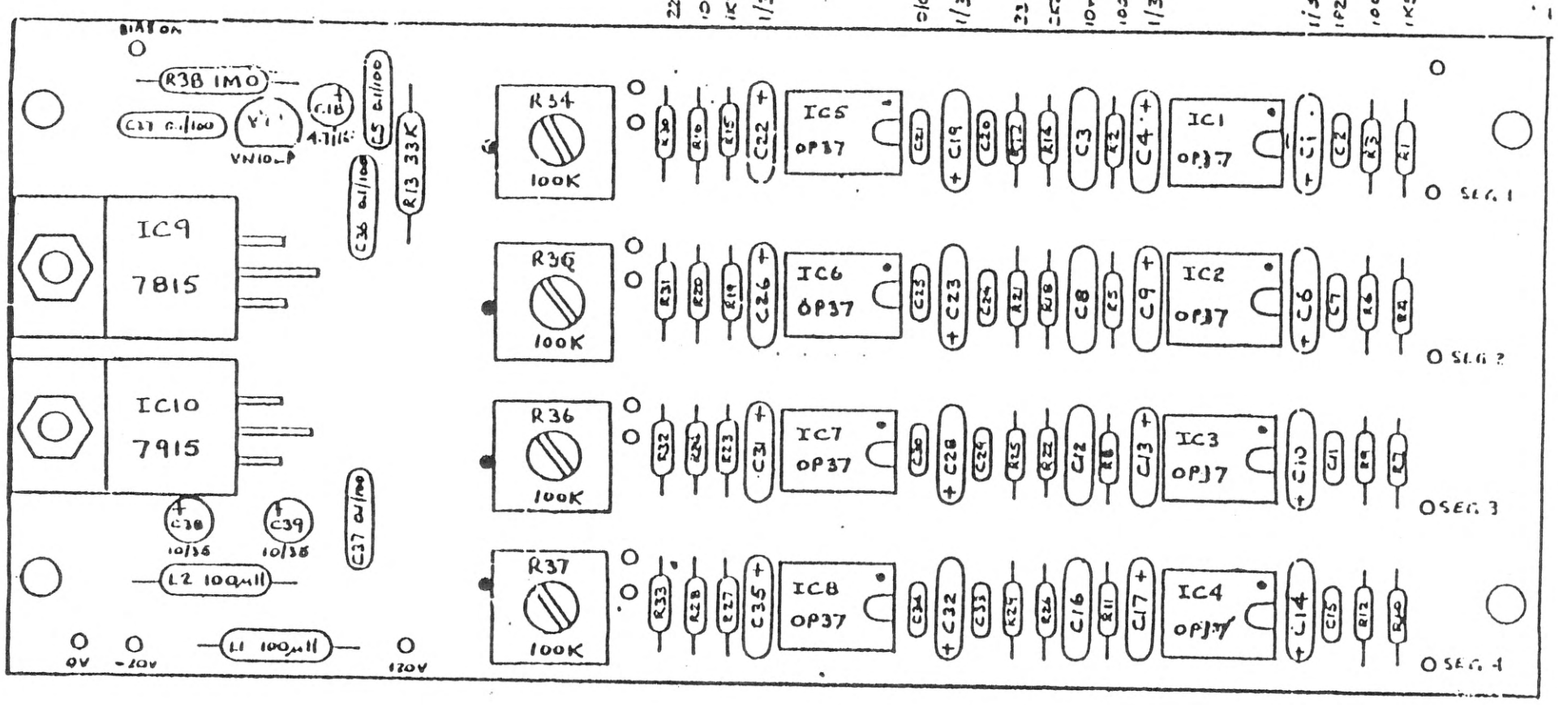

ISSUE 1 21.11.86		S360 BACKSCATTERED ELECTRON DETECTOR - HEAD AMP.	CD49-14

ISSUE 1 29.1.86		S360. BACKSCATTERED DETECTOR HEAD AMPLIFIER	CA49-14

DRG. 1

DRAWING No. A0-91023G SHT 1.

USED ON 7/13704

DO NOT SCALE

PROJECTION

MARK	INITIALS	ECO	DATE	SHEET
				1
3rd ISS	JAC		13-2-81	2
2nd ISS	JAC		5-5-81	3
2nd ISS	JAC		20-5-81	4
2nd ISS	CH		15-6-81	5
2nd ISS	AD		24-8-81	6
2nd ISS	AP		30/9/81	7

MAINS I/P CABLE

L1
L2/N
PE

MAIN CONTACTOR RL1/1,2,3

MAIN CIRCUIT BREAKER CB1 25A

E.O. SUPPLIES CIRCUIT BREAKER CB2 16A

OPERATE RELAY RLY2/1-4

R1 5R1

ANTI-SURGE RELAY

RLY3/1-4

PLINTH CIRCUIT BREAKER 16A

CONTROL CIRCUIT BREAKER CB4 6A

CONSOLE FANS CIRCUIT BREAKER CB5 6A

RLY4 HOLD 'ON' RELAY

EXTENSION RACK CIRCUIT BREAKER CB6 6A

IMAGE PROCESSOR CIRCUIT BREAKER CB7 6A

POWER ON STANDBY PLINTH 6-WAY BICC BURNDY

CONSOLE FAN (115V)

LINK SYSTEM RACK (115V)

THERMOSTAT LINK TO SHT 2

POWER TO TRANSFORMER SHT 2

POWER ON STANDBY SPARE 6-WAY BICC BURNDY

GUN EMT 6-WAY BICC BURNDY

POWER 6-WAY BICC BURNDY

SPARE POWER 6-WAY BICC BURNDY

SCINTILLATOR 6-WAY BICC BURNDY

IMAGE PROCESSOR 1 6-WAY BICC BURNDY

IMAGE PROCESSOR 2 6-WAY BICC BURNDY

PANEL E SK 8 12-WAY BICC BURNDY

POWER CONTROL UNIT

T1

From T1 (SHT 2)

To S Socket

TRANSFORMER CONNECTIONS	SUPPLY VOLTAGE 100	110	120	200	230	240
180V			75			75
110V		75			75	
100V	76			76		
0V	76	76	76	76	Link	Link
180V			75			Link
110V		75			Link	
100V	75			Link		
0V	76	76	76	76	76	76

SUPPLY FREQUENCY	50 Hz	60 Hz
24V		87
20V	87	

NOTE
⊕ PE PROTECTIVE EARTH

© CAMBRIDGE INSTRUMENTS LTD. 1981. THIS DRAWING CONTAINS INFORMATION TO B.S. 308 : 1972 REMOVE BURRS FROM SHARP EDGES AND CORNERS USING ____ RAD. MAX.

CONFIDENTIAL
This document is the property of Cambridge Instruments Ltd. Its contents must not be copied or communicated to a third party without the written permission of the Company.

MATERIAL
PROTECTIVE FINISH
TOLERANCES unless otherwise stated: DECIMAL ± ; FRACTIONS & WORKING FEATURES ; ANGULAR ±
DIMENSIONS IN unless otherwise stated
SURFACE ROUGHNESS unless otherwise stated

DRAWN JAC 16/4/81 | TRACED | DES. AND CKD | PROD CHKD | APPROVED | SCALE

CAMBRIDGE INSTRUMENTS LTD.

TITLE POWER SUPPLY RACK WIRING DIAGRAM

DRAWING No. A0-91023G SHT 1 OF 2

114

DRAWING No. AO-910236 SHT 2

USED ON 713796

DO NOT SCALE

PROJECTION

TWR	30785	JAL	1-2-82 2
N/A	30831	JAL	3-2-82 3
LS	40210	JAL	16/8/82 7

FROM SHT 1

TS1 — WT 38 — 75° TH1 — WT 44 — 75° TH2 — WT 46 — 75° TH3 — WT 47 — 75° TH4

TS2 — WT 49

TRANSFORMER CONNECTIONS	SUPPLY VOLTAGE 100	110	120	200	230	240
120			45			45
110		45			45	
100	45			45		
0V	42	42	42	LINK	LINK	LINK
120			45			LINK
110		45			LINK	
100	45			LINK		
0V	42	42	42	42	42	42

POWER FROM SHT 1

L — 50/0.25 — BN 45

N — 50/0.25

BN 40 SHT 1 — 110V

100V

0V

BL 42 — 0V

5V

BL 41 SHT 1 — 5V

22V

EB3 P.E. FROM SHT 1 — GN/Y 34

TZ

LINK

-28V

WT

SK 19/PL 19 — SK 20/PL 20

CB8

WT 127

WT 128

FROM EB1 — WT 126

DISPLAYS CIRCUIT BREAKER 6A

BN 44

BL 44

EB4 FROM SHT 1 — GN/Y 33

EB5 FROM SHT 1 — GN/Y 126

BK 125

BK 124

SK 11

SK 12

ACCESSORIES POWER 117 VOLTS

DISPLAYS POWER 117 VOLTS

P.S.U. 1 — -28V, 5A SCAN — 32/0.2 GN 58 → EB7

P.S.U. 6 — -28V 5A SCAN — 32/0.2 GN 107 → EB8

P.S.U. 5 — -28V, 3A SCAN — 24/0.2 GN 108 → EB8

P.S.U. 3 — -28V, 3A SCAN — 24/0.2 GN 109 → EB7

P.S.U. 8 — -5V, 3A SCAN — 24/0.2 GN 53 → EB9

P.S.U. 7 — +20V, 6A LENS — 32/0.2 GN 57 → EB7

P.S.U. 9 — -20V, 3A LENS — 24/0.2 GN 106 → EB8

P.S.U. 4 — +20V 7A LENS — 24/0.2 GN 55 → EB9

P.S.U. 2 — -20V, 2A LENS — 24/0.2 GN 60 → EB10

SCAN POWER

32/0.2 E 105	1	+28V
32/0.2 S 104	2	0V
32/0.2 S 103	3	0V
32/0.2 V 102	4	-28V
24/0.2 E 101	5	+28V
24/0.2 S 100	6	0V
24/0.2 S 99	7	0V
24/0.2 V 98	8	-20V
24/0.2 E 97	9	+5V
24/0.2 BK 96	10	0V
EB9 ← 32/0.2 GN 58		P.E.

SK 14

RECORD POWER

24/0.2 E 110	1	+28V
24/0.2 S 111	2	0V
24/0.2 S 112	3	0V
24/0.2 V 113	4	+28V
24/0.2 E 114	5	+20V
24/0.2 S 115	6	0V
24/0.2 S 116	7	0V
24/0.2 V 117	8	+20V
EB7 ← 24/0.2 GN 118		P.E.

SK 17

LENS POWER

32/0.2 E 95	11	-20V
32/0.2 BK 94	12	0V
24/0.2 E 93	13	-20V
24/0.2 BK 92	14	0V
24/0.2 E 91	15	+20V
24/0.2 S 90	16	0V
24/0.2 S 89	17	0V
24/0.2 V 88	18	-20V
EB9 ← 32/0.2 GN 54		P.E.

SK 16

LENS 3 POWER

24/0.2 E 119	11	+20V
24/0.2 BK 120	12	0V
24/0.2 R 121	13	+20V
EB10 ← 24/0.2 GN 123	14	P.E.
24/0.2 V 122	15	-20V

SK 18

EB7 — GN/Y 109, 118 — 24V 57,58

EB8 — GN/Y 106, 107, 108

EB9 — GN/Y 52, 53, 54, 58

EB10 — GN/Y 59, 123

SCALE 1 — 0 10 20 30 mm

© CAMBRIDGE INSTRUMENTS LTD. 1981. THIS DRAWING CONFORMS TO B.S. 308 : 1972 REMOVE BURRS FROM SHARP EDGES AND CORNERS USING ____ AND ____

CONFIDENTIAL This document is the property of Cambridge Instruments Ltd. Its contents must not be copied or communicated to a third party without the written permission of the Company.

MATERIAL

PROTECTIVE FINISH

TOLERANCES unless otherwise stated: DECIMAL x; FRACTIONS ±; ANGULAR °

DIMENSIONS IN

SURFACE ROUGHNESS

DRAWN/DAC	TRACED	DES.RVD.CKD	PROD. CHKD.	APPROVED	SCALE
MAR 16 '81		DATE	DATE	DATE	

CAMBRIDGE INSTRUMENTS LTD.

TITLE: POWER SUPPLY RACK WIRING DIAGRAM

DRAWING No. AO-910236 SHT 2 OF 2

115

DRAWING No
A1 853412

USED ON
714239
714240

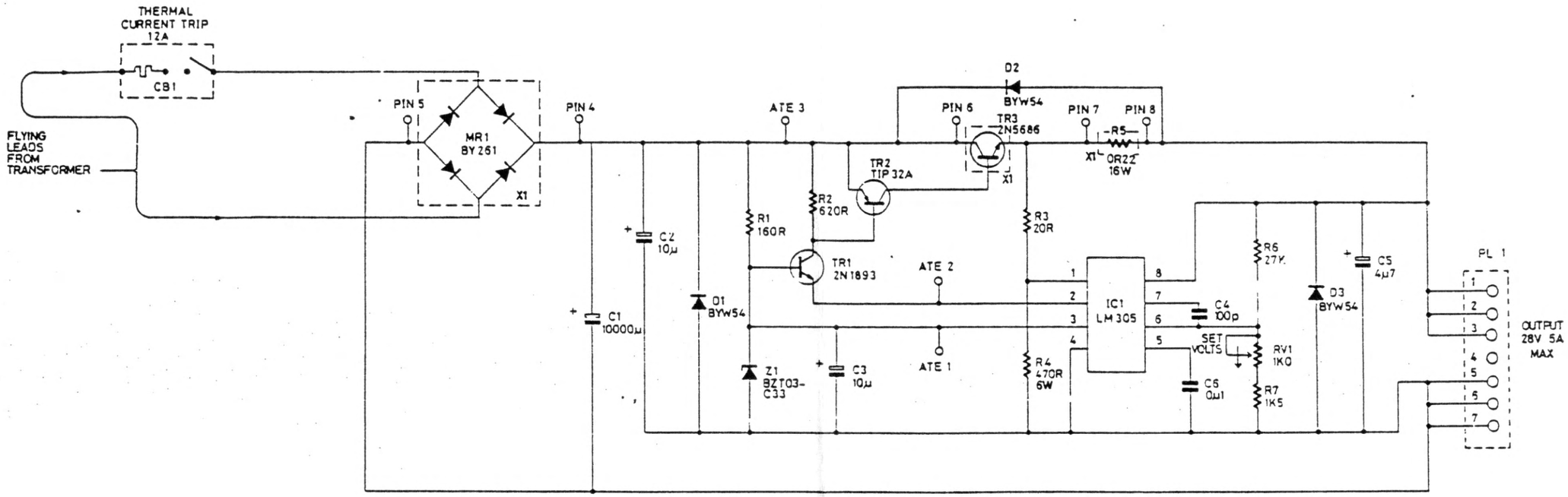

© CAMBRIDGE INSTRUMENTS LIMITED 1985.
THIS DRAWING IS THE PROPERTY OF THE CAMBRIDGE INSTRUMENT CO. LTD. GROUP OF COMPANIES WHICH INCLUDE CAMBRIDGE INSTRUMENTS LTD. U.K. CAMBRIDGE INSTRUMENTS GMBH WEST GERMANY CAMBRIDGE INSTRUMENTS SARL FRANCE CAMBRIDGE INSTRUMENTS INC. U.S.A. THIS DRAWING SHALL NOT BE COPIED OR REPRODUCED IN ANY FORM TO THIRD PERSONS WITHOUT WRITTEN PERMISSION FROM CAMBRIDGE INSTRUMENTS LIMITED.
IN THE U.S.A. THIS DRAWING IS LOANED WITH THE EXPRESSED AGREEMENT THAT THE DRAWING AND INFORMATION THEREIN CONTAINED ARE THE PROPERTY OF CAMBRIDGE INSTRUMENTS INC. AND WILL NOT BE REPRODUCED, COPIED OR OTHERWISE DISPOSED OF DIRECTLY AND WILL NOT BE USED IN WHOLE OR IN PART TO ASSIST IN MAKING OR TO FURNISH ANY INFORMATION FOR THE MAKING OF DRAWINGS OR PRINTS OR OTHER REPRODUCTIONS THEREOF OR FOR THE MAKING OF APPARATUS OR PARTS THEREOF EXCEPT UPON WRITTEN PERMISSION OF CAMBRIDGE INSTRUMENTS INC. FIRST OBTAINED SPECIFIC AS TO EACH CASE. THE ACCEPTANCE OF THIS DRAWING WILL BE CONSTRUED AS AN ACCEPTANCE OF THE FOREGOING AGREEMENT.

-7	6	D3
R3	1	Z1
RV1		

POWER SUPPLY MODULE - 28 VOLTS, 5A

CAMBRIDGE INSTRUMENTS LIMITED

CIRCUIT DIAGRAM No
A1-853412
Sht 1

116

A1 853414

USED ON

714239

714240

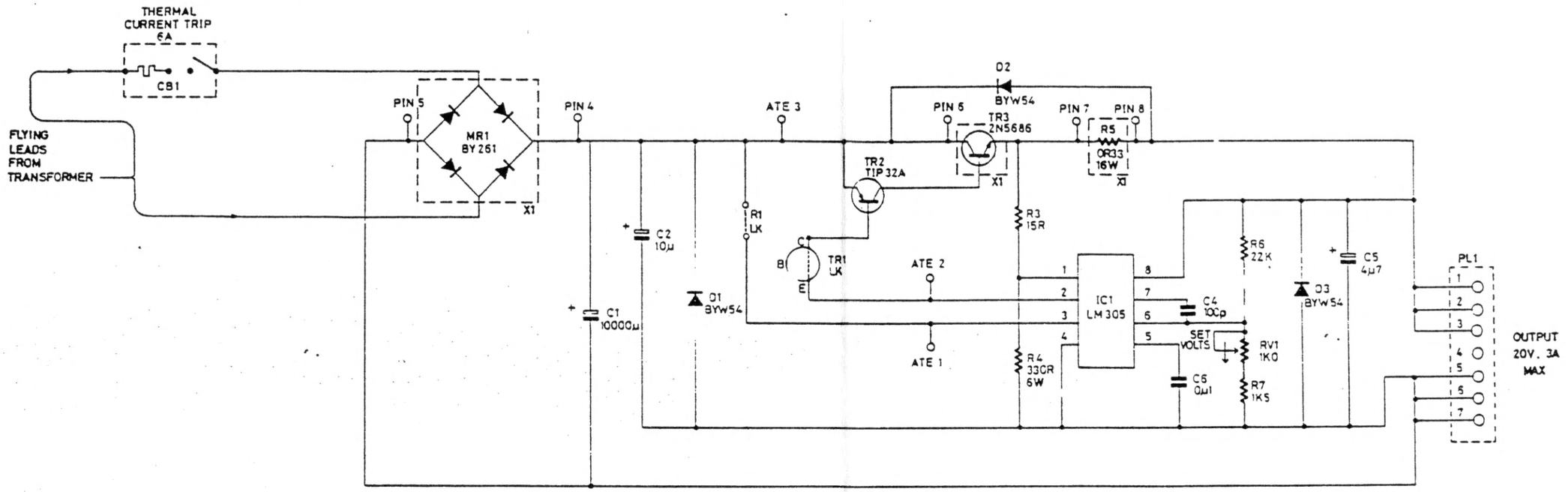

© CAMBRIDGE INSTRUMENTS LIMITED 1985.

THIS DRAWING IS THE PROPERTY OF THE CAMBRIDGE INSTRUMENT CO. LTD. GROUP OF COMPANIES WHICH INCLUDE CAMBRIDGE INSTRUMENTS LTD. U.K., CAMBRIDGE INSTRUMENTS GMBH WEST GERMANY, CAMBRIDGE INSTRUMENTS SARL, FRANCE, CAMBRIDGE INSTRUMENTS INC. U.S.A. THIS DRAWING SHALL NOT BE COPIED OR REPRODUCED IN ANY FORM TO THIRD PERSONS WITHOUT WRITTEN PERMISSION FROM CAMBRIDGE INSTRUMENTS LIMITED.

IN THE U.S.A. THIS DRAWING IS LOANED WITH THE EXPRESSED AGREEMENT THAT THE DRAWING AND INFORMATION THEREIN CONTAINED ARE THE PROPERTY OF CAMBRIDGE INSTRUMENTS INC. AND WILL NOT BE REPRODUCED, COPIED, OR OTHERWISE DISPOSED OF DIRECTLY AND WILL NOT BE USED IN WHOLE OR IN PART TO ASSIST IN MAKING OR TO FURNISH ANY INFORMATION FOR THE MAKING OF DRAWINGS OR PRINTS OR OTHER REPRODUCTIONS THEREOF OR FOR THE MAKING OF APPARATUS OR PARTS THEREOF EXCEPT UPON WRITTEN PERMISSION OF CAMBRIDGE INSTRUMENTS INC. FIRST OBTAINED SPECIFIC AS TO EACH CASE. THE ACCEPTANCE OF THIS DRAWING WILL BE CONSTRUED AS AN ACCEPTANCE OF THE FOREGOING AGREEMENT.

LAST COMPONENT REF No USED

R7 L6 D3

TR3 IC1

RV1

1	C/N No	
7-86	DATE	
1	ISSUE	

TITLE: POWER SUPPLY MODULE - 20 VOLTS, 3A

DRN E.L.	DATE 4.8.85	CAMBRIDGE INSTRUMENTS LIMITED
APP	DATE	
TRACED	DATE	
CHKD	DATE 7-86	PRODUCT / CODE

CIRCUIT DIAGRAM No A1-853414 Sht 1

117

DRAWING No
A1 853416
USED ON
714240

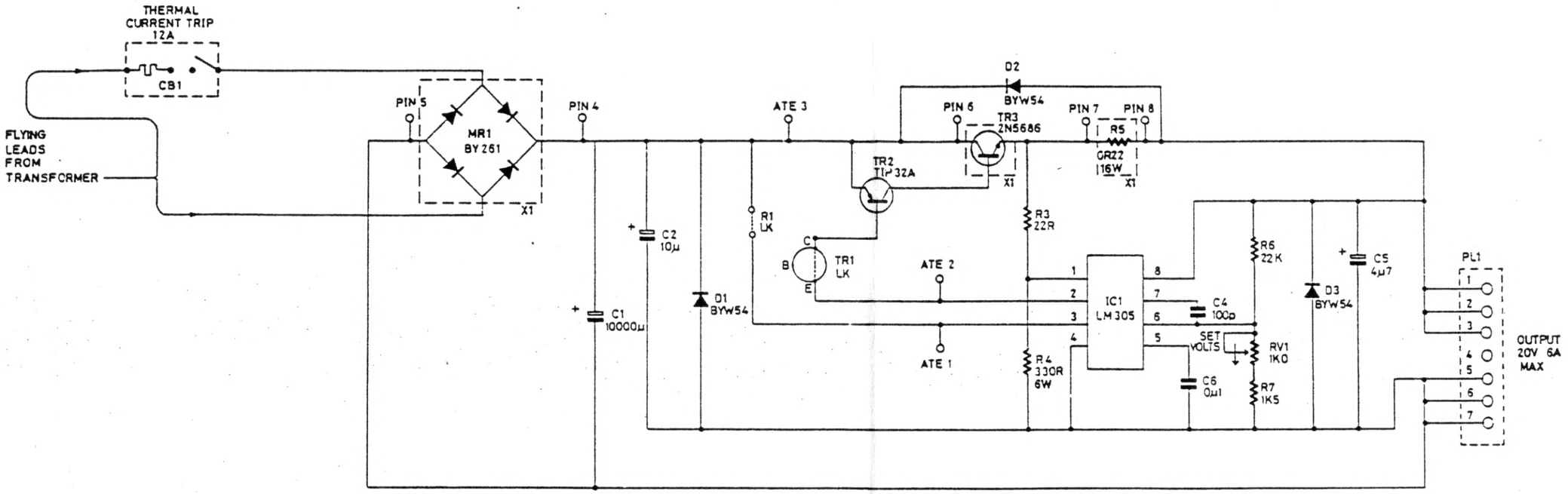

© CAMBRIDGE INSTRUMENTS LIMITED 1985.
THIS DRAWING IS THE PROPERTY OF THE CAMBRIDGE INSTRUMENT CO LTD GROUP OF COMPANIES WHICH INCLUDE CAMBRIDGE INSTRUMENTS LTD U.K. CAMBRIDGE INSTRUMENTS GMBH WEST GERMANY CAMBRIDGE INSTRUMENTS SARL FRANCE CAMBRIDGE INSTRUMENTS INC U.S.A. THIS DRAWING SHALL NOT BE COPIED OR REPRODUCED IN ANY FORM TO THIRD PERSONS WITHOUT WRITTEN PERMISSION FROM CAMBRIDGE INSTRUMENTS LIMITED
IN THE U.S.A. THIS DRAWING IS LOANED WITH THE EXPRESSED AGREEMENT THAT THE DRAWING AND INFORMATION THEREIN CONTAINED ARE THE PROPERTY OF CAMBRIDGE INSTRUMENTS INC AND WILL NOT BE REPRODUCED COPIED OR OTHERWISE DISCLOSED OR DIRECTLY AND WILL NOT BE USED IN WHOLE OR IN PART TO ASSIST IN MAKING OR TO FURNISH ANY INFORMATION FOR THE MAKING OF DRAWINGS OR PRINTS OR OTHER REPRODUCTIONS THEREOF OR FOR THE MAKING OF APPARATUS OR PARTS THEREOF EXCEPT UPON WRITTEN PERMISSION OF CAMBRIDGE INSTRUMENTS INC FIRST OBTAINED SPECIFIC AS TO EACH CASE THE ACCEPTANCE OF THIS DRAWING WILL BE CONSTRUED AS AN ACCEPTANCE OF THE FOREGOING AGREEMENT

LAST COMPONENT REF No
USED
R7 6 D3
R3 1
RV1

1		
7-86		DATE
1		ISSUE

TITLE
POWER SUPPLY MODULE - 20VOLTS, 6A

DRN E.L. DATE 4.8.85
APP DATE
TRACED DATE
CHKD 7-86

CAMBRIDGE INSTRUMENTS LIMITED

CIRCUIT DIAGRAM No
A1-853416
Sht 1

118

A1 853418

USED ON

714240

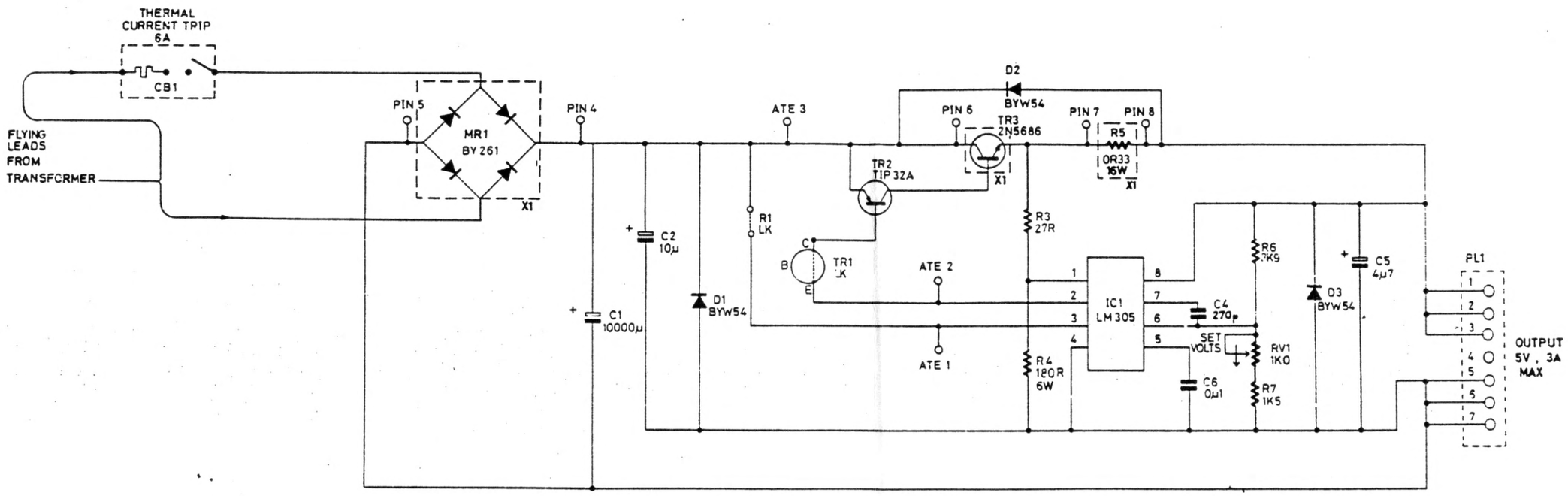

© CAMBRIDGE INSTRUMENTS LIMITED 1985.
THIS DRAWING IS THE PROPERTY OF THE CAMBRIDGE INSTRUMENT CO LTD GROUP OF COMPANIES WHICH INCLUDE CAMBRIDGE INSTRUMENTS LTD U.K. CAMBRIDGE INSTRUMENTS GMBH WEST GERMANY CAMBRIDGE INSTRUMENTS SARL FRANCE CAMBRIDGE INSTRUMENTS INC U.S.A. THIS DRAWING SHALL NOT BE COPIED OR IN PRODUCED IN ANY FORM TO THIRD PERSONS WITHOUT WRITTEN PERMISSION FROM CAMBRIDGE INSTRUMENTS LIMITED
IN THE U.S.A. THIS DRAWING IS LOANED WITH THE EXPRESSED AGREEMENT THAT THE DRAWING AND INFORMATION THEREIN CONTAINED ARE THE PROPERTY OF CAMBRIDGE INSTRUMENTS INC AND SHALL NOT BE REPRODUCED COPIED OR OTHERWISE DISPOSED OF DIRECTLY AND SHALL NOT BE USED IN WHOLE OR IN PART TO ASSIST IN MAKING OR TO FURNISH ANY INFORMATION FOR THE MAKING OF DRAWINGS OR PRINTS OR OTHER REPRODUCTIONS THEREOF OR FOR THE MAKING OF APPARATUS OR PARTS THEREOF EXCEPT UPON WRITTEN PERMISSION OF CAMBRIDGE INSTRUMENTS INC FIRST OBTAINED SPECIFIC AS TO EACH CASE THE ACCEPTANCE OF THIS DRAWING SHALL BE CONSTRUED AS AN ACCEPTANCE OF THE FOREGOING AGREEMENT

7	6	D3	
R3	1		
RV1			

DRN E.L.	DATE 4.8.85	POWER SUPPLY MODULE - 5 VOLTS, 3A
CHK	DATE	
TRACED	DATE	
ENGR	DATE 4.7.86	

CAMBRIDGE INSTRUMENTS LIMITED

A1-853418 Sht 1

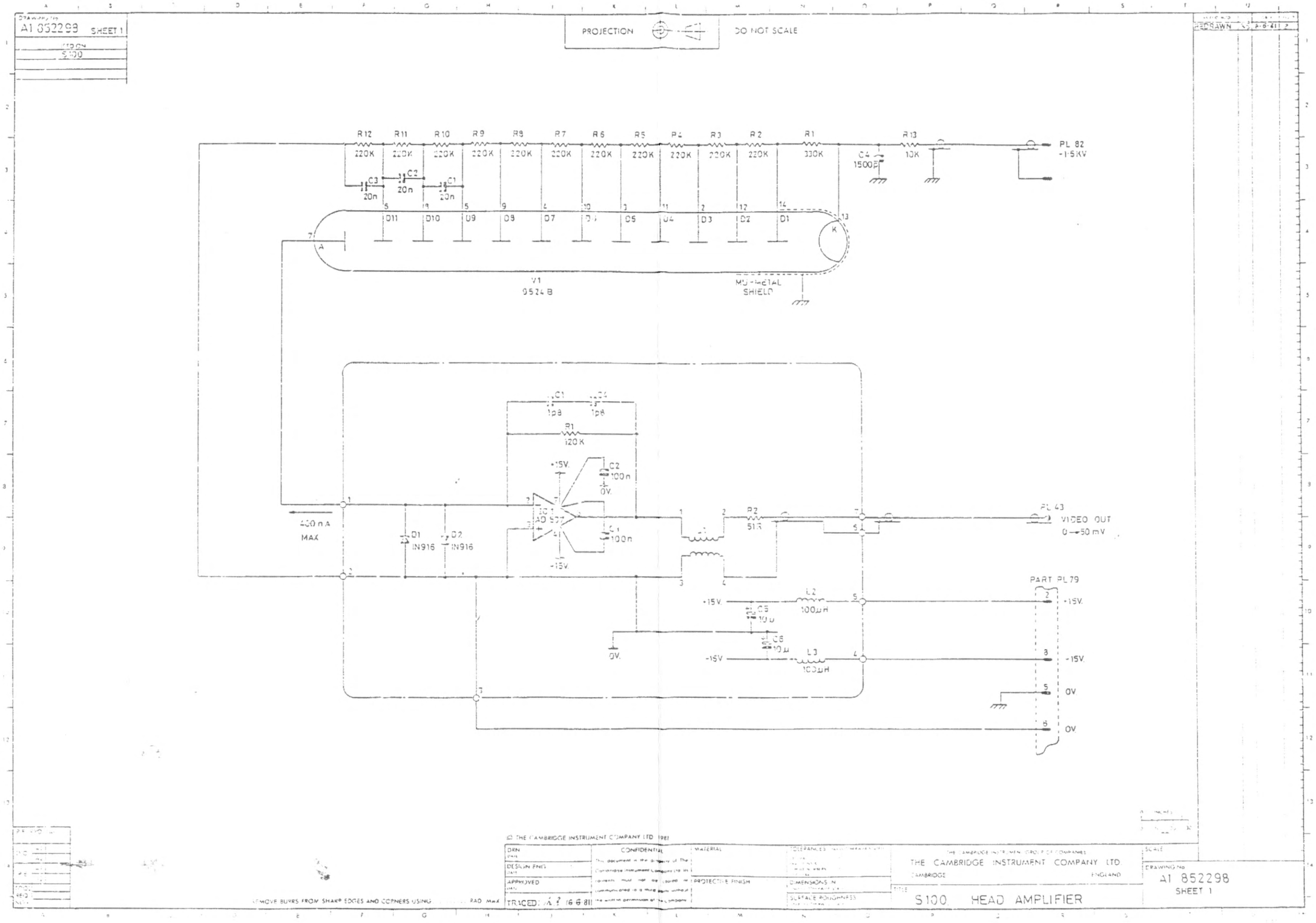

A1 852298 SHEET 1
S100
PROJECTION
DO NOT SCALE
R12 220K
R11 220K
R10 220K
R9 220K
R8 220K
R7 220K
R6 220K
R5 220K
R4 220K
R3 220K
R2 220K
R1 330K
R13 10K
C4 1500p
PL 82 -1·5KV
C3 20n
C2 20n
C1 20n
D11 D10 D9 D8 D7 D6 D5 D4 D3 D2 D1
V1 9524 B
MU-METAL SHIELD
C1 1p8
C4 1p8
R1 120K
+15V.
C2 100n
0V.
IC1 AD 507
C1 100n
-15V.
400 nA MAX
D1 IN916
D2 IN916
R2 51R
PL 43
VIDEO OUT 0→50 mV
PART PL 79
+15V.
L2 100μH
C5 10μ
C6 10μ
L3 100μH
-15V.
0V.
© THE CAMBRIDGE INSTRUMENT COMPANY LTD 1981
CONFIDENTIAL
MATERIAL
PROTECTIVE FINISH
DIMENSIONS IN
SURFACE ROUGHNESS
THE CAMBRIDGE INSTRUMENT COMPANY LTD.
CAMBRIDGE ENGLAND
S100 HEAD AMPLIFIER
DRAWING No A1 852298 SHEET 1
REMOVE BURRS FROM SHARP EDGES AND CORNERS USING RAD MAX

A2-854240 sht.1

USED ON

S360

PROJECTION

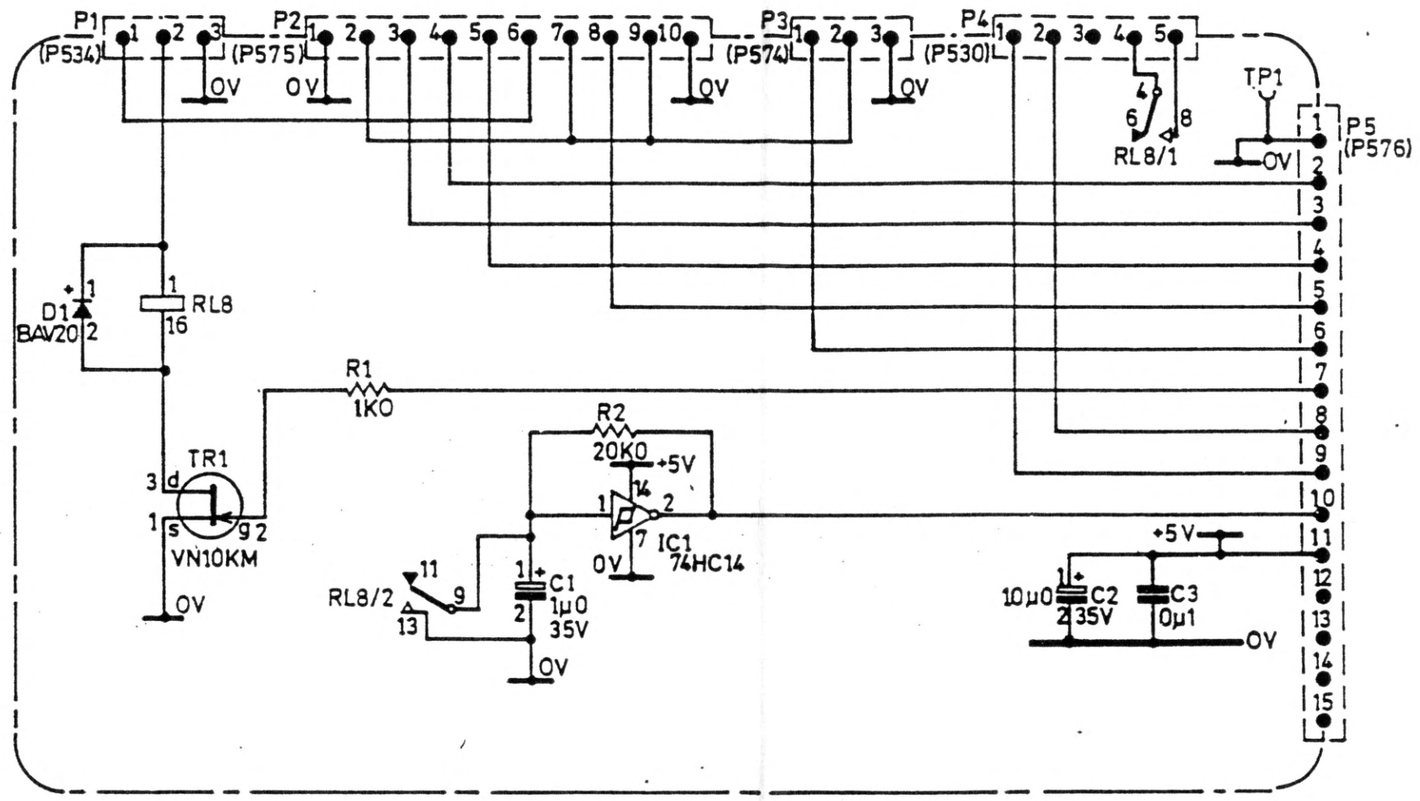

© CAMBRIDGE INSTRUMENTS LTD. 1982.

0 INCHES 1
0 10 20 30
mm

THIS DRAWING CONFORMS TO B.S.308:1972

REMOVE BURRS FROM SHARP EDGES AND CORNERS

USING _____ RAD. MAX.

CONFIDENTIAL
This document is the property of Cambridge Instruments Ltd
Its contents must not be copied or communicated to a third party without written permission.

MATERIAL:

PROTECTIVE FINISH

TOLERANCES UNLESS OTHERWISE STATED
DECIMAL ±
FRACTIONS & WHOLE NUMBER ±
ANGULAR ±

DIMENSIONS IN UNLESS OTHERWISE STATED

SURFACE ROUGHNESS: UNLESS OTHERWISE STATED

DRAWN: R. J. R. DATE 11. 2. 87.	DESIGN ENG.CKD. DATE	PROD. CHKD: DATE 18/2/87	APPROVED: DATE 18/2/87	SCALE: —

CAMBRIDGE INSTRUMENTS LTD.

TITLE CIRCUIT DIAGRAM
S360 VAC. CONTROL DAUGHTER BOARD.

DRAWING No.
A2-854240 sht. 1

DRAWING No
A1 854108

USED ON

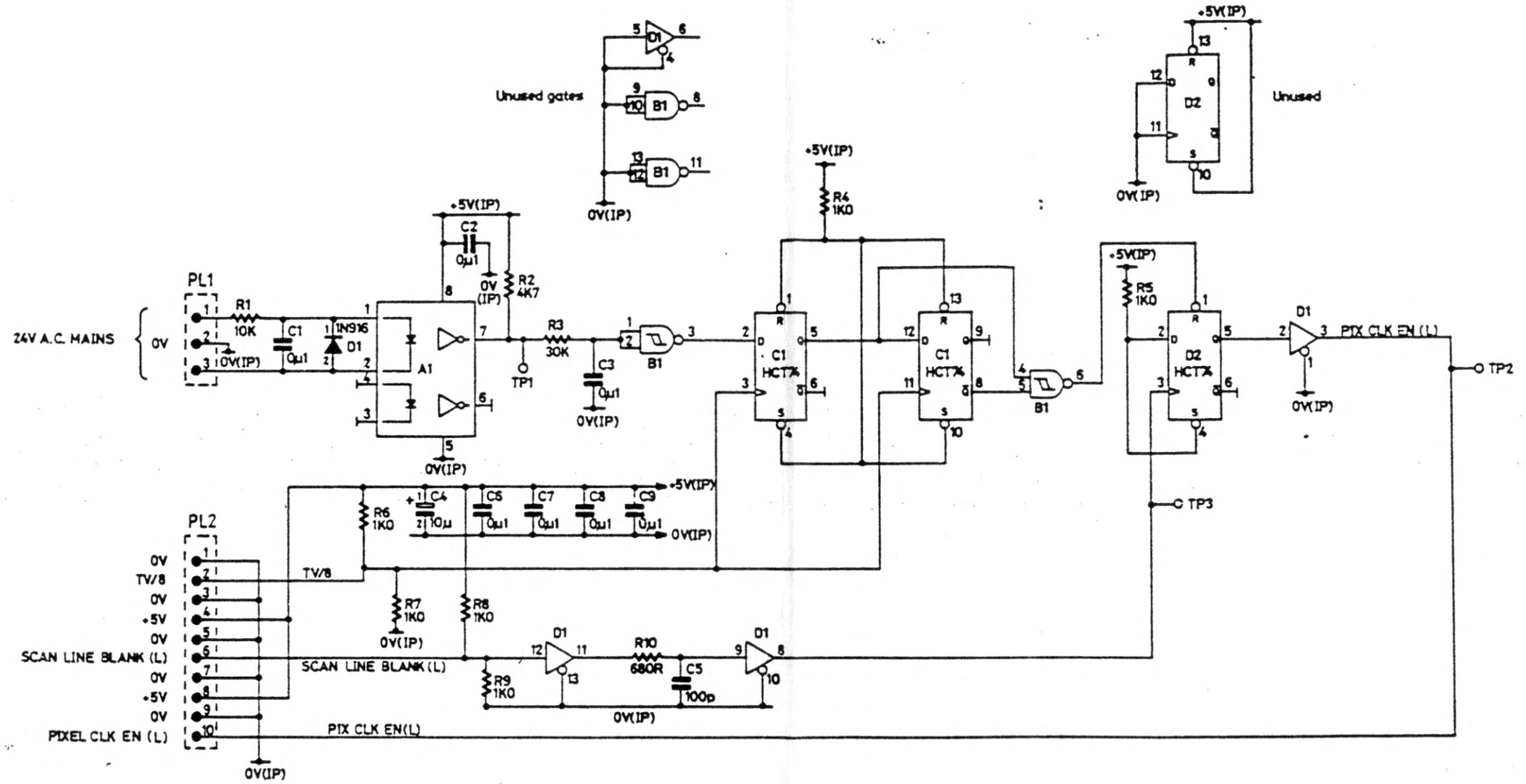

A1	IC1	HCPL-2730	0V-5, +5V-8
B1	IC2	HC132	0V-7, +5V-14
C1	IC3	HCT74	0V-7, +5V-14
D2	IC4	HCT74	0V-7, +5V-14
D1	IC5	HC125	0V-7, +5V-14

© CAMBRIDGE INSTRUMENTS LIMITED 1987.
THIS DRAWING IS THE PROPERTY OF THE CAMBRIDGE INSTRUMENT CO. LTD. GROUP OF COMPANIES WHICH INCLUDE CAMBRIDGE INSTRUMENTS LTD., U.K., CAMBRIDGE INSTRUMENTS GMBH, WEST GERMANY, CAMBRIDGE INSTRUMENTS SARL, FRANCE, CAMBRIDGE INSTRUMENTS INC, U.S.A. THIS DRAWING SHALL NOT BE COPIED OR REPRODUCED IN ANY FORM TO THIRD PERSONS WITHOUT WRITTEN PERMISSION FROM CAMBRIDGE INSTRUMENTS LIMITED.
IN THE U.S.A. THIS DRAWING IS LOANED WITH THE EXPRESSED AGREEMENT THAT THE DRAWING AND INFORMATION THEREIN CONTAINED ARE THE PROPERTY OF CAMBRIDGE INSTRUMENTS INC. AND WILL NOT BE REPRODUCED, COPIED, OR OTHE WISE DISPOSED OF DIRECTLY, AND SHALL NOT BE USED IN WHOLE OR IN PART TO ASSIST IN MAKING OR TO FURNISH ANY INFORMATION FOR THE MAKING OF DRAWINGS OR PRINTS OR OTHER REPRODUCTIONS THEREOF OR FOR THE MAKING OF APPARATUS OR PARTS THEREOF EXCEPT UPON WRITTEN PERMISSION OF CAMBRIDGE INSTRUMENTS INC. PRINT OBTAINED SPECIFIC AS TO EACH CASE. THE ACCEPTANCE OF THIS DRAWING SHALL BE CONSTRUED AS AN ACCEPTANCE OF THE FOREGOING AGREEMENT.

LAST COMPONENT REF No
USED
R 10 C 9 L
T IC 5

C/N No | DATE | ISSUE

UNLESS OTHERWISE STATED ALL RESISTORS ARE 0.4 WATT, 2% TOLERANCED

TITLE
IMAGE PROCESSOR MAINS SYNC. P.C.B.
CIRCUIT DIAGRAM

DRN DATE 9/1/87
APP DATE 7-1-87
TRACED DATE
CHKD DATE 9/1/87

CAMBRIDGE INSTRUMENTS LIMITED

PRODUCT S360 CODE

CIRCUIT DIAGRAM No. A1 854108 Sheet 1

122

CIRCUIT DIAGRAM No.
A0 - 854048
SHEET 1 PAGE 1 OF 3

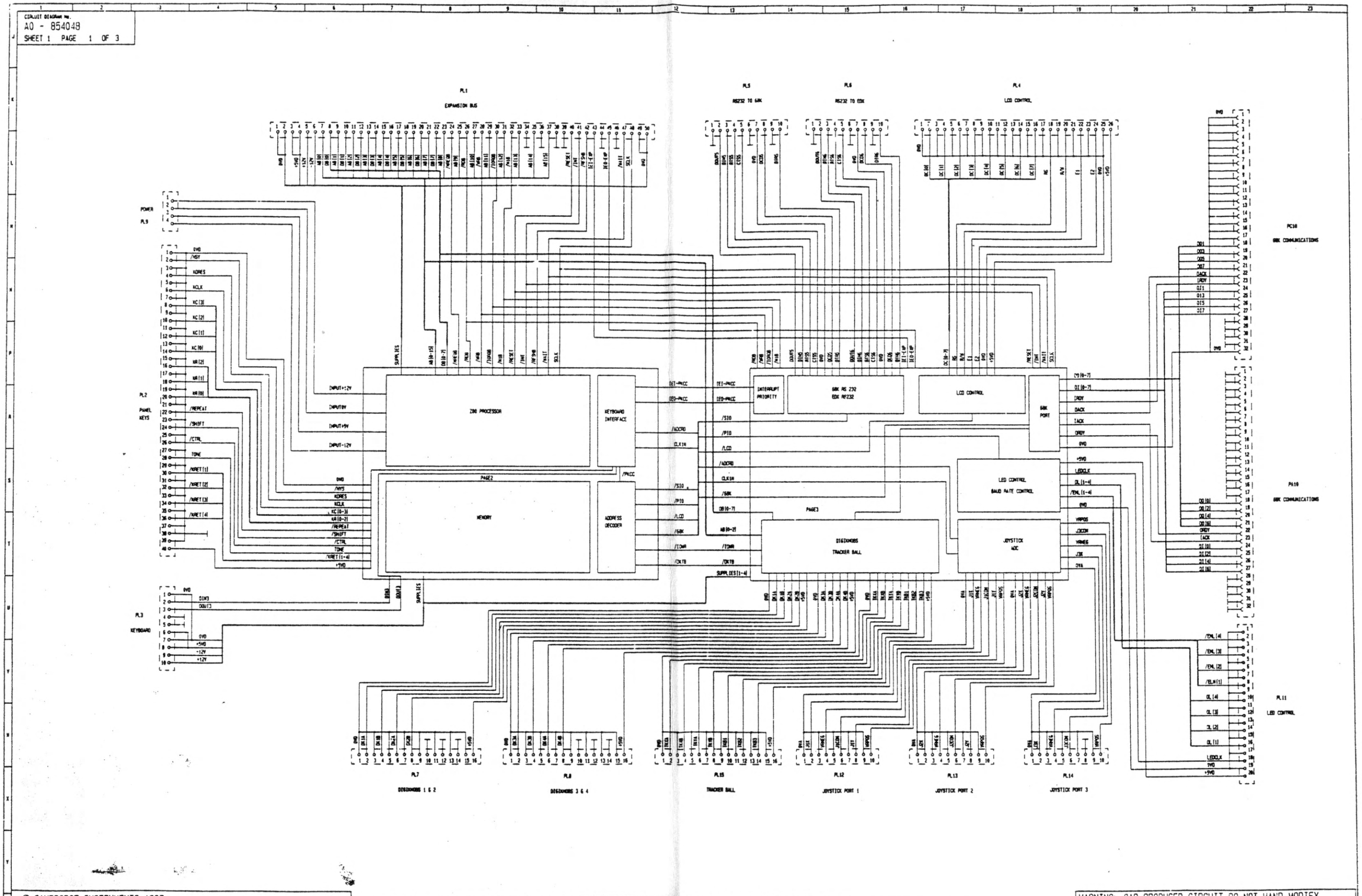

© CAMBRIDGE INSTRUMENTS 1987

THIS DRAWING IS THE PROPERTY OF THE CAMBRIDGE INSTRUMENT CO. LTD. WHICH INCLUDES CAMBRIDGE INSTRUMENTS LTD., U.K., CAMBRIDGE INSTRUMENTS GMBH, WEST GERMANY, CAMBRIDGE INSTRUMENTS SARL, FRANCE, AND CAMBRIDGE INSTRUMENTS INC. U.S.A. THIS DRAWING SHALL NOT BE COPIED OR REPRODUCED IN ANY FORM TO THIRD PARTIES WITHOUT WRITTEN PERMISSION FROM CAMBRIDGE INSTRUMENTS LIMITED.
IN THE U.S.A., THIS DRAWING IS LOANED WITH THE EXPRESSED AGREEMENT THAT THE DRAWING AND INFORMATION THEREIN CONTAINED ARE THE PROPERTY OF CAMBRIDGE INSTRUMENTS INC. AND WILL NOT BE REPRODUCED, COPIED, OR OTHERWISE DISPOSED OF DIRECTLY, AND WILL NOT BE USED IN WHOLE OR IN PART TO ASSIST IN MAKING OR TO FURNISH ANY INFORMATION FOR THE MAKING OF DRAWINGS OR PRINTS OR OTHER REPRODUCTIONS THEREOF OR FOR THE MAKING OF APPARATUS OR PARTS THEREOF EXCEPT UPON WRITTEN PERMISSION OF CAMBRIDGE INSTRUMENTS INC. FIRST OBTAINED SPECIFIC AS TO EACH CASE. THE ACCEPTANCE OF THIS DRAWING WILL BE CONSTRUED AS AN ACCEPTANCE OF THE FOREGOING AGREEMENT.

JDW		EL	RMW	RMW	DRN
[illegible]		RMW	G.P.	J.R.	CHKD
[illegible]			L.P.	T.W.W.	APP
[illegible]			S.K.H	J.L.T.	PCA
[illegible]			N.R.	N.R.	PED
30.3.90	21.11.89	30/10/87	7-7-87	25/3/87	DATE
40304	26682	24236	23609	INITIAL	MOD NO
7A	7	6	5	1	ISSUE

TITLE
S360 USER INTERFACE
CIRCUIT DIAGRAM

WARNING: CAD PRODUCED CIRCUIT DO NOT HAND MODIFY

		DATE
DRN	R.H.WARD	25/3/87
CHKD	J.ROSE	
APP	T.WASON	
PCA	J.L.TOWELL	
PED	W.ROLFE	

CAMBRIDGE INSTRUMENTS LIMITED

CIRCUIT DIAGRAM No.
A0 - 854048
SHEET 1 PAGE 1 OF 3

123

PLANDALE S.M.A.

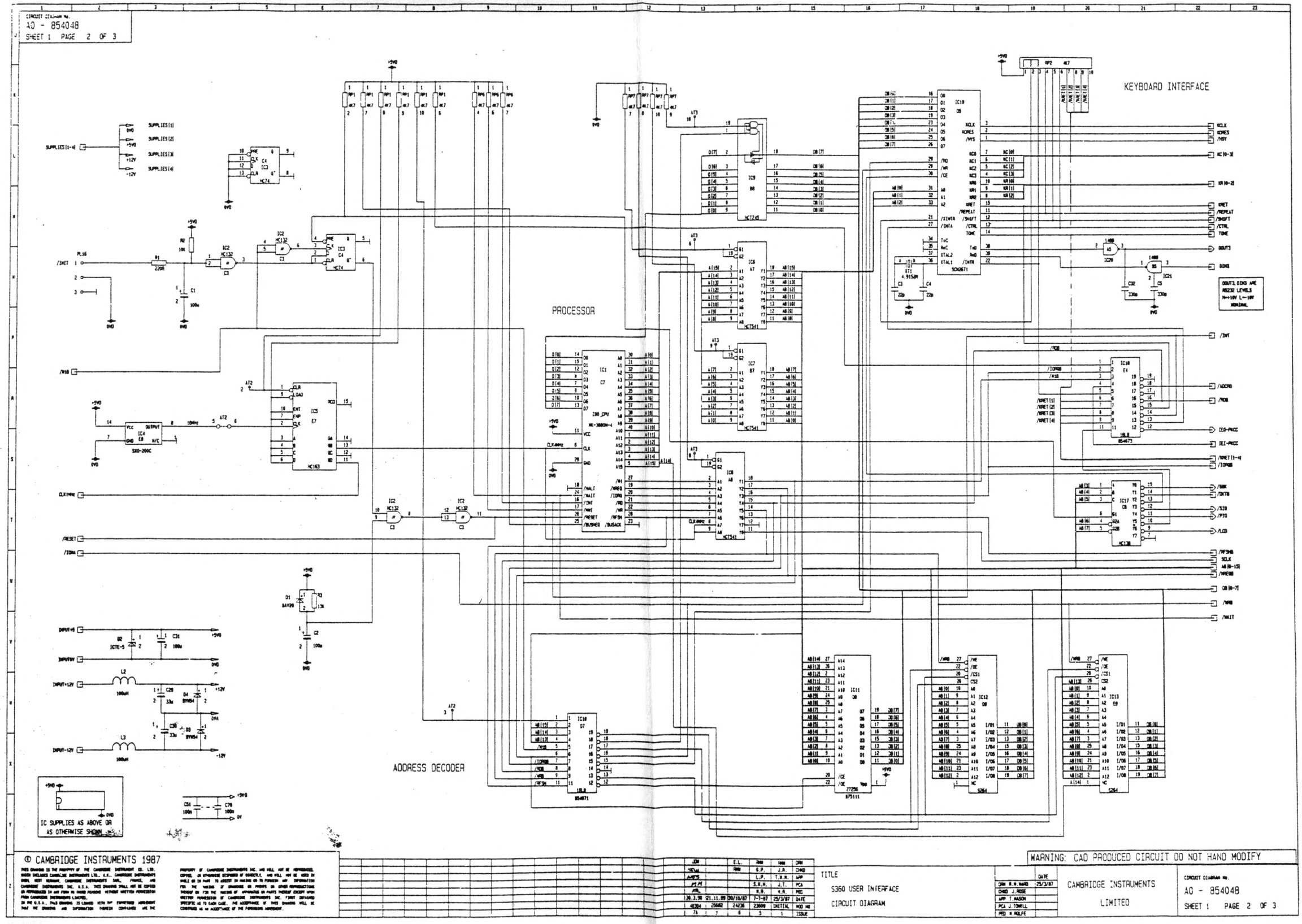
CIRCUIT DIAGRAM No.
AO - 854048
SHEET 1 PAGE 2 OF 3
KEYBOARD INTERFACE
PROCESSOR
ADDRESS DECODER
IC SUPPLIES AS ABOVE OR AS OTHERWISE SHOWN
© CAMBRIDGE INSTRUMENTS 1987
WARNING: CAD PRODUCED CIRCUIT DO NOT HAND MODIFY
TITLE
S360 USER INTERFACE
CIRCUIT DIAGRAM
CAMBRIDGE INSTRUMENTS
LIMITED
CIRCUIT DIAGRAM No.
AO - 854048
SHEET 1 PAGE 2 OF 3
PLANDALE S.M.A.

124

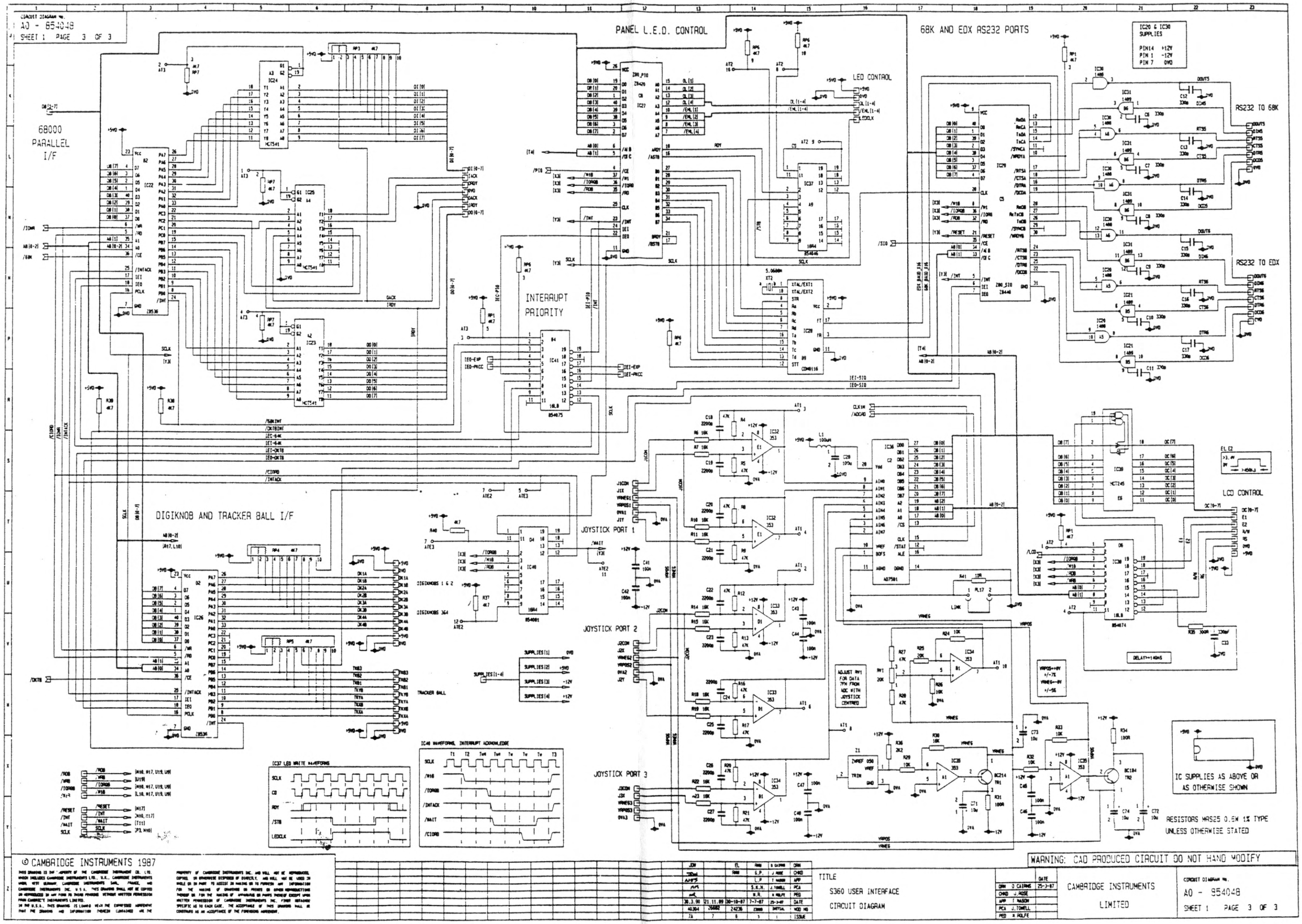
CIRCUIT DIAGRAM No.
AO - 854048
SHEET 1 PAGE 3 OF 3
PANEL L.E.D. CONTROL
68K AND EDX RS232 PORTS
IC20 & IC30 SUPPLIES
PIN14 +12V
PIN 1 -12V
PIN 7 0VD
68000 PARALLEL I/F
LED CONTROL
RS232 TO 68K
RS232 TO EDX
INTERRUPT PRIORITY
DIGIKNOB AND TRACKER BALL I/F
JOYSTICK PORT 1
JOYSTICK PORT 2
JOYSTICK PORT 3
LCD CONTROL
TRACKER BALL
IC37 LED WRITE WAVEFORMS
IC40 WAVEFORMS, INTERRUPT ACKNOWLEDGE
IC SUPPLIES AS ABOVE OR AS OTHERWISE SHOWN
RESISTORS MRS25 0.6W 1% TYPE UNLESS OTHERWISE STATED
WARNING: CAD PRODUCED CIRCUIT DO NOT HAND MODIFY
© CAMBRIDGE INSTRUMENTS 1987
TITLE
S360 USER INTERFACE
CIRCUIT DIAGRAM
CAMBRIDGE INSTRUMENTS LIMITED
CIRCUIT DIAGRAM No.
AO - 854048
SHEET 1 PAGE 3 OF 3
125
PLANDALE S.M.A.

CIRCUIT DIAGRAM No.
A0 - 854048
SHEET 1 PAGE 3 OF 3

PANEL L.E.D. CONTROL

68K AND EDX RS232 PORTS

IC20 & IC30 SUPPLIES
PIN14 +12V
PIN 1 -12V
PIN 7 0V0

68000 PARALLEL I/F

INTERRUPT PRIORITY

LED CONTROL

RS232 TO 68K

RS232 TO EDX

DIGIKNOB AND TRACKER BALL I/F

JOYSTICK PORT 1

JOYSTICK PORT 2

JOYSTICK PORT 3

LCD CONTROL

DELAY=140nS

ADJUST RV1 FOR DATA 7FH FROM ADC WITH JOYSTICK CENTRED

IC SUPPLIES AS ABOVE OR AS OTHERWISE SHOWN

RESISTORS MRS25 0.5W 1% TYPE UNLESS OTHERWISE STATED

IC37 LED WRITE WAVEFORMS

IC40 WAVEFORMS, INTERRUPT ACKNOWLEDGE

© CAMBRIDGE INSTRUMENTS 1987

THIS DRAWING IS THE PROPERTY OF THE CAMBRIDGE INSTRUMENT CO. LTD. WHICH INCLUDES CAMBRIDGE INSTRUMENTS LTD., U.K., CAMBRIDGE INSTRUMENTS GMBH, WEST GERMANY, CAMBRIDGE INSTRUMENTS SARL, FRANCE, AND CAMBRIDGE INSTRUMENTS INC., U.S.A. THIS DRAWING SHALL NOT BE COPIED OR REPRODUCED IN ANY FORM TO THOSE PURPOSES WITHOUT WRITTEN PERMISSION FROM CAMBRIDGE INSTRUMENTS LIMITED.
IN THE U.S.A., THIS DRAWING IS LOANED WITH THE EXPRESSED AGREEMENT THAT THE DRAWING AND INFORMATION THEREIN CONTAINED ARE THE PROPERTY OF CAMBRIDGE INSTRUMENTS INC. AND WILL NOT BE REPRODUCED, COPIED, OR OTHERWISE DISPOSED OF DIRECTLY, AND WILL NOT BE USED IN WHOLE OR IN PART TO ASSIST IN MAKING OR TO FURNISH ANY INFORMATION FOR THE MAKING OF DRAWINGS OR PARTS THEREOF EXCEPT UPON WRITTEN PERMISSION OF CAMBRIDGE INSTRUMENTS INC. FURTHER DETAILED SPECIFIC AS TO EACH CASE. THE ACCEPTANCE OF THIS DRAWING SHALL BE CONSTRUED AS AN ACCEPTANCE OF THE FOREGOING AGREEMENT.

JCH		EL	RMB	S CAIRNS	CHKD
30JUL87		RMB	G.P.	J. ROSE	CHKD
AUG87			L.P.	T. MASON	APP
MAY89			S.K.H.	J.TOWELL	PCA
mod			N.R.	R.ROLFE	PRD
30.3.90	21.11.89	30-10-87	7-7-87	25-3-87	DATE
40304	25682	24236	23888	SMTH/A	MOD NO
7A	7	6	5	1	ISSUE

WARNING: CAD PRODUCED CIRCUIT DO NOT HAND MODIFY

TITLE
S360 USER INTERFACE
CIRCUIT DIAGRAM

	DATE
DRN S CAIRNS	25-3-87
CHKD J. ROSE	
APP T. MASON	
PCA J. TOWELL	
PRD R ROLFE	

CAMBRIDGE INSTRUMENTS LIMITED

CIRCUIT DIAGRAM No.
A0 - 954048
SHEET 1 PAGE 3 OF 3

125

PLAINDALE S.M.A.

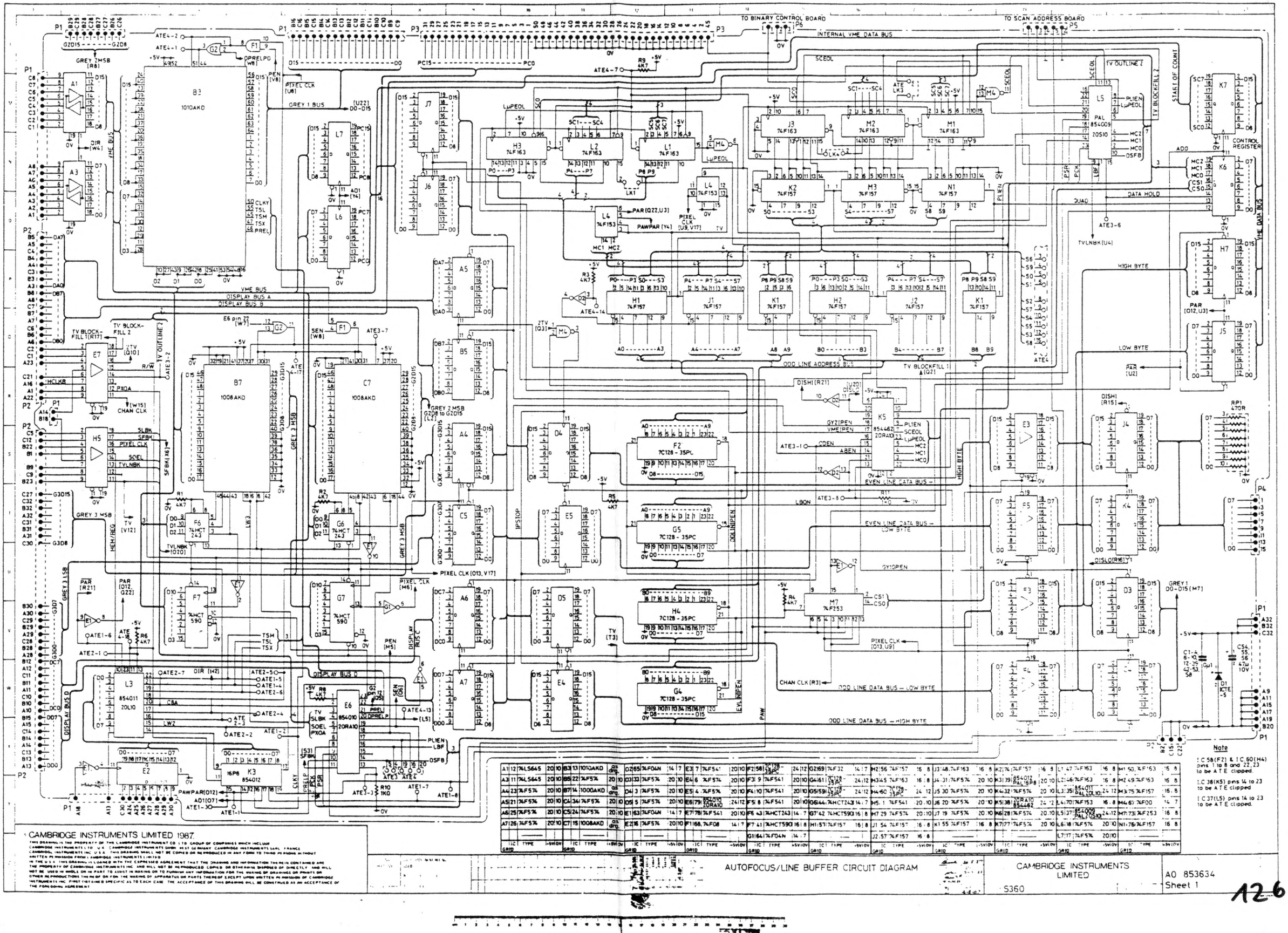

	IC TYPE	+5V	0V	IC TYPE	+5V	0V	IC TYPE	+5V	0V	IC TYPE	+5V	0V	IC TYPE	+5V	0V	IC TYPE	+5V	0V	IC TYPE	+5V	0V	IC TYPE	+5V	0V	IC TYPE	+5V	0V	IC TYPE	+5V	0V
A1	74LS645	20	10	B3	1010AKD	gs drg	D2	74F04N	14	7	E3	74F541	20	10	F2	7C128-35PC	24	12	G2	74F32	14	7	H2	74F157	16	8	J3	74F163	16	8	K2	74F157	16	8	L1	74F163	16	8	M1	74F163	16	8
A3	74LS645	20	10	B5	74F574	20	10	D3	74F574	20	10	E4	74F541	20	10	F3	74F541	20	10	G4	7C128-35PC	24	12	H3	74F163	16	8	J4	74F574	20	10	K3	854011 PAL 16P8	20	10	L2	74F163	16	8	M2	74F163	16	8
A4	74F574	20	10	B7	1008AKD	gs drg	D4	74F574	20	10	E5	74F574	20	10	F4	74F541	20	10	G5	7C128-35PC	24	12	H4	7C128-35PC	24	12	J5	74F574	20	10	K4	74F574	20	10	L3	854011 PAL 20L10	24	12	M3	74F157	16	8
A5	74F574	20	10	C4	74F574	20	10	D5	74F574	20	10	E6	854010 20RA10	24	12	F5	74F541	20	10	G6	74HCT243	14	7	H5	74F541	20	10	J6	74F574	20	10	K5	20RA10 854462	24	12	L4	74F153	16	8	M4	6F00	14	7
A6	74F574	20	10	C5	74F574	20	10	E1	74F04N	14	7	E7	74F541	20	10	F6	74HCT243	14	7	G7	74HCT590	16	8	H7	74F574	20	10	J7	74F574	20	10	K6	74F574	20	10	L5	854000 PAL 20L10	24	12	M7	74F253	16	8
A7	74F574	20	10	C7	1008AKD	gs drg	E2	74F574	20	10	F1	74F08	14	7	F7	74HCT590	16	8	G1	74F04N	14	7	H1	74F157	16	8	J1	74F157	16	8	K1	74F157	16	8	K7	74F574	20	10	N1	74F157	16	8
																							J2	74F157	16	8								L7	74F574	20	10					

© CAMBRIDGE INSTRUMENTS LIMITED 1987.
THIS DRAWING IS THE PROPERTY OF THE CAMBRIDGE INSTRUMENT CO LTD GROUP OF COMPANIES WHICH INCLUDE CAMBRIDGE INSTRUMENTS LTD U.K. CAMBRIDGE INSTRUMENTS GMBH WEST GERMANY CAMBRIDGE INSTRUMENTS SARL FRANCE CAMBRIDGE INSTRUMENTS INC U.S.A. THIS DRAWING SHALL NOT BE COPIED OR REPRODUCED IN ANY FORM TO THIRD PERSONS WITHOUT WRITTEN PERMISSION FROM CAMBRIDGE INSTRUMENTS LIMITED.
IN THE U.S.A. THIS DRAWING IS LOANED WITH THE EXPRESSED AGREEMENT THAT THE DRAWING AND INFORMATION THEREIN CONTAINED ARE THE PROPERTY OF CAMBRIDGE INSTRUMENTS INC AND WILL NOT BE REPRODUCED COPIED OR OTHERWISE DISPOSED OF DIRECTLY AND WILL NOT BE USED IN WHOLE OR IN PART TO ASSIST IN MAKING OR TO FURNISH ANY INFORMATION FOR THE MAKING OF DRAWINGS OR PRINTS OR OTHER REPRODUCTIONS THEREOF OR FOR THE MAKING OF APPARATUS OR PARTS THEREOF EXCEPT UPON WRITTEN PERMISSION OF CAMBRIDGE INSTRUMENTS INC FIRST OBTAINED SPECIFICALLY TO EACH CASE THE ACCEPTANCE OF THIS DRAWING WILL BE CONSTRUED AS AN ACCEPTANCE OF THE FOREGOING AGREEMENT

AUTOFOCUS/LINE BUFFER CIRCUIT DIAGRAM

CAMBRIDGE INSTRUMENTS LIMITED

S360

A0 853634
Sheet 1

126

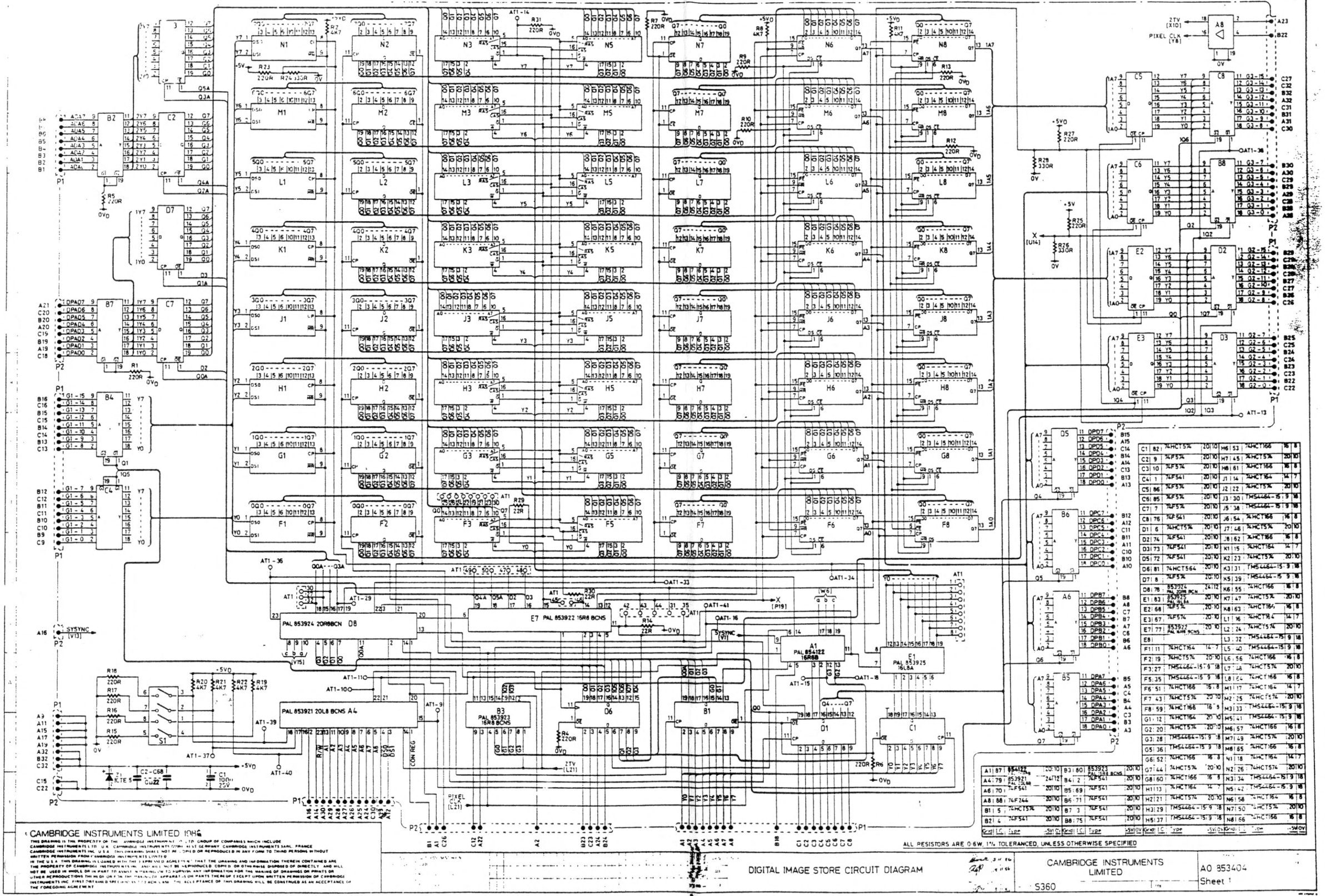

C1	82	74HCT574	20|10	H6	53	74HCT166	16|8
C2	9	74F574	20|10	H7	45	74HCT574	20|10
C3	10	74F574	20|10	H8	61	74HCT166	16|8
C4	1	74F541	20|10	J1	14	74HCT164	14|7
C5	86	74F574	20|10	J2	22	74HCT574	20|10
C6	85	74F574	20|10	J3	30	TMS4464-15	9|18
C7	7	74F574	20|10	J5	38	TMS4464-15	9|18
C8	76	74F541	20|10	J6	54	74HCT166	16|8
D1	6	74HCT574	20|10	J7	46	74HCT574	20|10
D2	74	74F541	20|10	J8	62	74HCT166	16|8
D3	73	74F541	20|10	K1	15	74HCT164	14|7
D5	72	74F541	20|10	K2	23	74HCT574	20|10
D6	81	74HCT564	20|10	K3	31	TMS4464-15	9|18
D7	8	74F574	20|10	K5	39	TMS4464-15	9|18
D8	78	853924 PAL 20R8 BCN	24|12	K6	55	74HCT166	16|8
E1	83	853925 PAL 16L8A	20|10	K7	47	74HCT574	20|10
E2	68	74F574	20|10	K8	63	74HCT166	16|8
E3	67	74F574	20|10	L1	16	74HCT164	14|7
E7	77	853922 PAL 16R8 BCNS	20|10	L2	24	74HCT574	20|10
E8				L3	32	TMS4464-15	9|18
F1	11	74HCT164	14|7	L5	40	TMS4464-15	9|18
F2	19	74HCT574	20|10	L6	56	74HCT166	16|8
F3	27	TMS4464-15	9|18	L7	48	74HCT574	20|10
F5	35	TMS4464-15	9|18	L8	64	74HCT166	16|8
F6	51	74HCT166	16|8	M1	17	74HCT164	14|7
F7	43	74HCT574	20|10	M2	25	74HCT574	20|10
F8	59	74HCT166	16|8	M3	33	TMS4464-15	9|18
G1	12	74HCT164	20|10	M5	41	TMS4464-15	9|18
G2	20	74HCT574	20|10	M6	57	74HCT166	16|8
G3	28	TMS4464-15	9|18	M7	49	74HCT574	20|10
G5	36	TMS4464-15	9|18	M8	65	74HCT166	16|8
G6	52	74HCT166	16|8	N1	18	74HCT164	14|7
G7	44	74HCT574	20|10	N2	26	74HCT574	20|10
G8	60	74HCT166	16|8	N3	34	TMS4464-15	9|18
H1	13	74HCT164	14|7	N5	42	TMS4464-15	9|18
H2	21	74HCT574	20|10	N6	58	74HCT164	16|8
H3	29	TMS4464-15	9|18	N7	50	74HCT574	20|10
H5	37	TMS4464-15	9|18	N8	66	74HCT166	16|8

A1	87	854122 PAL 16R8B	20|10	B3	80	853923 PAL 16R8 BCNS	20|10
A4	79	853921 PAL 20L8B	24|12	B4	2	74F541	20|10
A6	70	74F541	20|10	B5	69	74F541	20|10
A8	88	74F244	20|10	B6	71	74F541	20|10
B1	5	74HCT574	20|10	B7	3	74F541	20|10
B2	4	74F541	20|10	B8	75	74F541	20|10
Gnd	IC Type		-5V	0V	Gnd	IC Type	-5V 0V

Grid	IC	Type	+5V	0V	Grid	IC	Type	+5V	0V	Grid	IC	Type	+5V	0V
A1	70	74F244	20	10	D6	20	GRS 853473	24	12	J1	62	74F04	14	7
A2	18	74F541	20	10	D7	60	74F574	20	10	J2	71	74HCT00	14	7
A3	12	74HCT574	20	10						J3	47	74F283	16	8
A4	13	74HCT574	20	10	E1	34	74HCT574	20	10	J4	74	16L8A(853661)	20	10
A5	37	74F564	20	10	E2	36	74HCT574	20	10	J5	23	74HCT574	20	10
A6	38	74F564	20	10	E3	3	74AS181	24	12	J6	22	74HCT574	20	10
A7	55	74F574	20	10						J7	44	16L8A(853470)	20	10
					E7	57	2149-35	18	9					
B1	19	74F541	20	10						K2	64	74F04	14	7
B2	17	74HCT574	20	10	F1	53	74HCT574	20	10	K3	48	74F283	16	8
B3	14	74HCT574	20	10	F2	29	74HCT574	20	10	K4	50	74F283	16	8
B4	15	74HCT574	20	10	F3	63	74F574	20	10	K5	25	74HCT574	20	10
B5	10	74HCT574	20	10						K6	24	74HCT574	20	10
B6	61	74F574	20	10										
B7	59	74F574	20	10	F6	30	MPY016KJ1	49, 48	47, 46	L1	6	16L8A(853471)	20	10
										L2	39	16L8A(853472)	20	10
C1	16	74HCT574	20	10						L3	66	74F04	14	7
C2	31	74HCT574	20	10	F7	68	2149-35	18	9	L4	49	74F283	16	8
C3	65	74F574	20	10						L5	41	74HCT574	20	10
C4	9	74HCT574	20	10	G1	46	74HCT574	20	10	L6	40	74HCT574	20	10
C5	11	74F574	20	10	G2	5	74F182	16	8	L7	58	74F574	20	10
C6	54	74F541	20	10	G3	2	74AS181	24	12					
C7	56	74F574	20	10	G7	52	74HCT590	16	8					
					H1	35	74HCT574	20	10	M2a	75	74F74	14	7
D1	22	74HCT574	20	10	H2	28	74HCT574	20	10	M2b	7	74F08	14	7
D2	33	74HCT574	20	10	H3	1	74AS181	24	12	M3	8	74HCT374	20	10
D3	4	74AS181	24	12	H4	73	16L8A(853554)	20	10	M4	69	74HCT74	14	7
					H5	27	74F541	20	10	M5	43	74F574	20	10
D5	21	GRS 853473	24	12	H6	26	74F541	20	10	M6	42	74F574	20	10
					H7	51	74F574	20	10	M7	72	74F574	20	10

CAMBRIDGE INSTRUMENTS LIMITED 1986.
THIS DRAWING IS THE PROPERTY OF THE CAMBRIDGE INSTRUMENT CO LTD GROUP OF COMPANIES WHICH INCLUDE CAMBRIDGE INSTRUMENTS LTD U.K. CAMBRIDGE INSTRUMENTS GMBH WEST GERMANY CAMBRIDGE INSTRUMENTS SARL FRANCE CAMBRIDGE INSTRUMENTS INC. U.S.A. THIS DRAWING SHALL NOT BE COPIED OR REPRODUCED IN ANY FORM TO THIRD PERSONS WITHOUT WRITTEN PERMISSION FROM CAMBRIDGE INSTRUMENTS LIMITED
IN THE U.S.A. THIS DRAWING IS LOANED WITH THE EXPRESSED AGREEMENT THAT THE DRAWING AND INFORMATION THEREIN CONTAINED ARE THE PROPERTY OF CAMBRIDGE INSTRUMENTS INC AND SHALL NOT BE REPRODUCED COPIED OR OTHERWISE DISPOSED OF DIRECTLY AND WILL NOT BE USED IN WHOLE OR IN PART TO ASSIST IN MAKING OR TO FURNISH ANY INFORMATION FOR THE MAKING OF DRAWINGS OR PRINTS OR OTHER REPRODUCTIONS THEREOF OR FOR THE MAKING OF APPARATUS OR PARTS THEREOF EXCEPT UPON WRITTEN PERMISSION OF CAMBRIDGE INSTRUMENTS INC FIRST OBTAINED SPECIFIC AS TO EACH CASE THE ACCEPTANCE OF THIS DRAWING WILL BE CONSTRUED AS AN ACCEPTANCE OF THE FOREGOING AGREEMENT

ALL RESISTORS ARE 0·6 WATT, 1% TOLERANCED, UNLESS OTHERWISE SPECIFIED

GREY PROCESSOR CIRCUIT DIAGRAM

CAMBRIDGE INSTRUMENTS LIMITED

AO 853438

S360

SHT 1

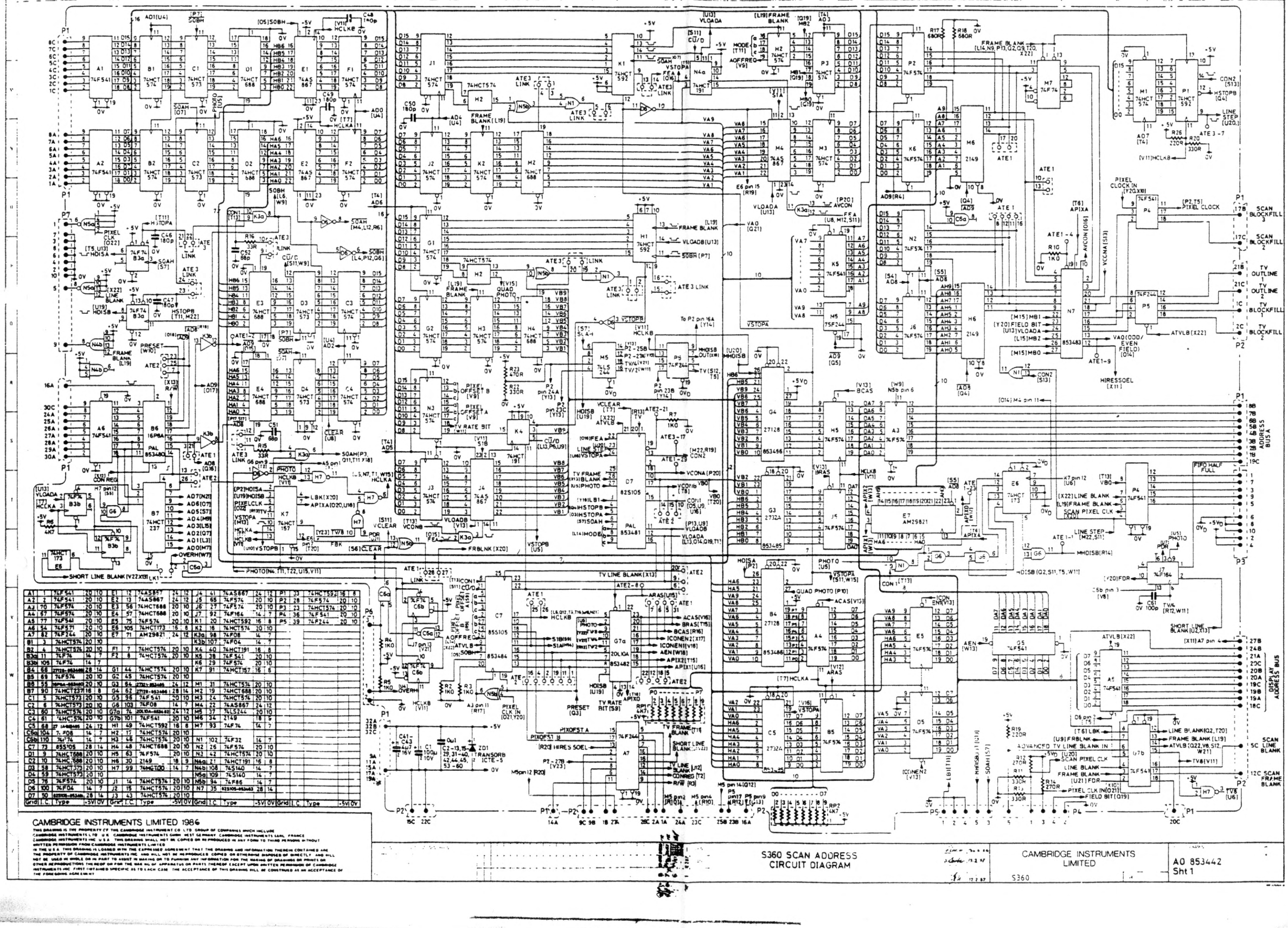

A1	1	74F541	20	10	E1	12	74AS867	24	12	J4	41	74AS867	24	12	P1	33	74HCT592	16	8						
A2	2	74F541	20	10	E2	13	74AS867	24	12	J5	65	74F574	20	10	P2	28	74F574	20	10						
A3	70	74F574	20	10	E3	56	74HCT688	20	10	J6	27	74F574	20	10	P3	23	74HCT574	20	10						
A4	67	74F574	20	10	E4	57	74HCT688	20	10	J7	92	74F164	14	7	P4	36	74F541	20	10						
A5	77	74F541	20	10	E5	75	74F574	20	10	K1	20	74HCT592	16	8	P5	39	74F244	20	10						
A6	54	74F571	20	10	E6	105	74HCT173	16	8	K2	19	74HCT574	20	10											
A7	82	74F244	20	10	E7	71	AM29821	24	12	K3a	98	74F08	14	7											
B1	3	74HCT574	20	10						K3b	107	74F04	14	7											
B2	4	74HCT574	20	10	F1	7	74HCT574	20	10	K4	40	74HCT191	16	8											
B3a	11	74F74	14	7	F2	8	74HCT574	20	10	K5	38	74F541	20	10											
B3b	105	74F74	14	7						K6	29	74F574	20	10											
B4	66	27128-853486	28	14	G1	44	74HCT574	20	10	K7	91	74HCT157	16	8											
B5	69	74F574	20	10	G2	45	74HCT574	20	10																
B6	55	N256A-853480	20	10	G3	64	27321-853485	24	12	M1	31	74HCT574	20	10											
B7	90	74HCT237	16	8	G4	62	27128-853486	28	14	M2	19	74HCT688	20	10											
C1	5	74HCT573	20	10	G5	98	74F541	20	10	M3	24	74HCT574	20	10											
C2	6	74HCT573	20	10	G6	103	74F08	14	7	M4	22	74AS867	24	12											
C3	80	74HCT574	20	10	G7a	74	20L10A-853482	24	12	M5	17	74LS244	20	10											
C4	61	74HCT574	20	10	G7b	101	74F541	20	10	M6	34	2149	18	9											
C5	68	27-853485	24	12	H1	49	74HCT592	16	8	M7	93	74F74	14	7											
C5a	104	7.F08	14	7	H2	17	74HCT574	20	10																
C5b	110	74F74	14	7	H3	48	74HCT688	20	10	N1	102	74F32	14	7											
C7	73	85S105	28	14	H4	48	74HCT688	20	10	N2	26	74F574	20	10											
D1	9	74HCT688	20	10	H5	63	74F574	20	10	N3	42	74HCT574	20	10											
D2	10	74HC688	20	10	H6	30	2149	18	9	N4a	21	74HCT191	16	8											
D3	58	74HCT573	20	10	H7	99	74HC1G00	14	7	N4b	108	74LS140	14	7											
D4	59	74HCT573	20	10						N5a	109	74S140	14	7											
D5	76	74F574	20	10	J1	14	74HCT574	20	10	N5b	94	74F86	14	7											
D6	100	74F04	14	7	J2	15	74HCT574	20	10	N7	35	825105-853483	28	14											
D7	50	825105-853483	28	14	J3	43	74HCT574	20	10																
Grid	I.C.	Type	+5V	0V	Grid	I.C.	Type	-5V	0V	Grid	I.C.	Type	-5V	0V	Grid	I.C.	Type	-5V	0V						

CAMBRIDGE INSTRUMENTS LIMITED 1986

THIS DRAWING IS THE PROPERTY OF THE CAMBRIDGE INSTRUMENT CO. LTD. GROUP OF COMPANIES WHICH INCLUDE CAMBRIDGE INSTRUMENTS LTD U.K. CAMBRIDGE INSTRUMENTS GMBH WEST GERMANY CAMBRIDGE INSTRUMENTS SARL FRANCE CAMBRIDGE INSTRUMENTS INC U.S.A. THIS DRAWING SHALL NOT BE COPIED OR REPRODUCED IN ANY FORM TO THIRD PERSONS WITHOUT WRITTEN PERMISSION FROM CAMBRIDGE INSTRUMENTS LIMITED

IN THE U.S.A. THIS DRAWING IS LOANED WITH THE EXPRESSED AGREEMENT THAT THE DRAWING AND INFORMATION THEREIN CONTAINED ARE THE PROPERTY OF CAMBRIDGE INSTRUMENTS INC AND SHALL NOT BE REPRODUCED COPIED OR OTHERWISE DISPOSED OF DIRECTLY AND WILL NOT BE USED IN WHOLE OR IN PART TO ASSIST IN MAKING OR TO FURNISH ANY INFORMATION FOR THE MAKING OF DRAWINGS OR PRINTS OR OTHER REPRODUCTIONS THEREOF OR FOR THE MAKING OF APPARATUS OR PARTS THEREOF EXCEPT UPON WRITTEN PERMISSION OF CAMBRIDGE INSTRUMENTS INC FIRST OBTAINED SPECIFIC AS TO EACH CASE. THE ACCEPTANCE OF THIS DRAWING SHALL BE CONSTRUED AS AN ACCEPTANCE OF THE FOREGOING AGREEMENT

S360 SCAN ADDRESS CIRCUIT DIAGRAM

CAMBRIDGE INSTRUMENTS LIMITED

S360

A0 853442 Sht 1

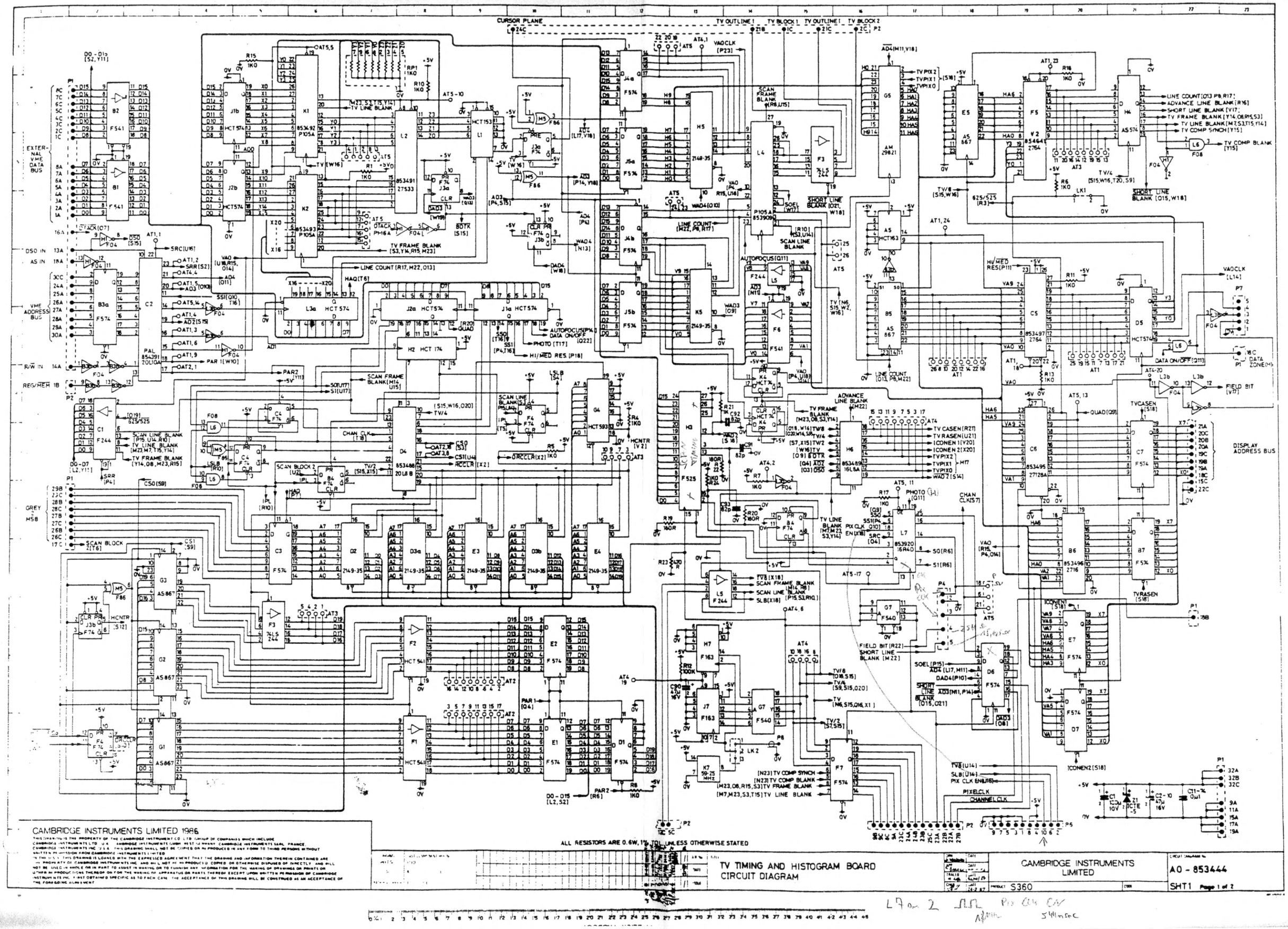

CAMBRIDGE INSTRUMENTS LIMITED 1986

THIS DRAWING IS THE PROPERTY OF THE CAMBRIDGE INSTRUMENT CO. LTD. GROUP OF COMPANIES WHICH INCLUDE CAMBRIDGE INSTRUMENTS LTD. U.K. CAMBRIDGE INSTRUMENTS GMBH, WEST GERMANY, CAMBRIDGE INSTRUMENTS SARL, FRANCE, CAMBRIDGE INSTRUMENTS INC. U.S.A. THIS DRAWING SHALL NOT BE COPIED OR REPRODUCED IN ANY FORM TO THIRD PERSONS WITHOUT WRITTEN PERMISSION FROM CAMBRIDGE INSTRUMENTS LIMITED.

IN THE U.S.A. THIS DRAWING IS LOANED WITH THE EXPRESSED AGREEMENT THAT THE DRAWING AND INFORMATION THEREIN CONTAINED ARE THE PROPERTY OF CAMBRIDGE INSTRUMENTS INC. AND WILL NOT BE REPRODUCED, COPIED OR OTHERWISE DISPOSED OF DIRECTLY AND WILL NOT BE USED IN WHOLE OR IN PART TO ASSIST IN MAKING OR TO FURNISH ANY INFORMATION FOR THE MAKING OF DRAWINGS OR PRINTS OR OTHER REPRODUCTIONS THEREOF OR FOR THE MAKING OF APPARATUS OR PARTS THEREOF EXCEPT UPON WRITTEN PERMISSION OF CAMBRIDGE INSTRUMENTS INC. FIRST OBTAINED SPECIFIC AS TO EACH CASE. THE ACCEPTANCE OF THIS DRAWING WILL BE CONSTRUED AS AN ACCEPTANCE OF THE FOREGOING AGREEMENT.

TV TIMING AND HISTOGRAM BOARD
CIRCUIT DIAGRAM

CAMBRIDGE INSTRUMENTS LIMITED

PRODUCT S360

CIRCUIT DIAGRAM No. A0 - 853444

SHT1 Page 1 of 2

L7 on 2 Pix Clk CN 544msec

130

DRAWING No Page 2 of 2
A1 - 853444 Sht 1

USED ON

Grid	IC	Description
A5	55	74HCT163 +5V-16, 0V-8
B1	2	74F541 +5V-20, 0V-10
B2	1	74F541 +5V-20, 0V-10
B3a	7	74F574 +5V-20, 0V-10
B3b	34	74F04 +5V-14, 0V-7
B4	14	74F74 +5V-14 0V-7
B5	54	74AS867 +5V-24 0V-12
B6	61	853496 2716 +5V-24, 0V-12
B7	63	74F574 +5V-20 0V-10
C1	35	74F244 +5V-20, 0V-10
C2	8	854391 20L10A +5V-24, 0V-12
C3	16	74F574 +5V-20, 0V-10
C4	80	74F74 +5V-14, 0V-7
C5	57	853497 2764 +5V-28, 0V-14
C6	60	853495 27128A +5V-28, 0V-14
C7	62	74F574 +5V-20, 0V-10
D1	30	74F574 +5V-20, 0V-10
D2	17	2149-35 +5V-18, 0V-9
D3a	18	2149-35 +5V-18, 0V-9
D3b	20	2149-35 +5V-18 0V-9
D4	15	853488 20L8B +5V-24, 0V-12
D5	59	74HCT574 +5V-20, 0V-10
D6	(40)	74F574 +5V-20, 0V-10
D7	65	74F574 +5V-20, 0V-10

Grid	IC	Description
E1	29	74F574 +5V-20, 0V-10
E2	28	74F574 +5V-20, 0V-10
E3	19	2149-35 +5V-18, 0V-9
E4	21	2149-35 +5V-18, 0V-9
E5	53	74AS867 +5V-24, 0V-12
E7	64	74F574 +5V-20, 0V-10
F1	27	74HCT541 +5V-20, 0V-10
F2	26	74HCT541 +5V-20 0V-10
F3	25	74LS244 +5V-20 0V-10
F4	81	74F74 +5V-14 0V-7
F5	56	854641 2764 +5V-24, 0V-12
F6	38	74F541 +5V-20, 0V-10
F7	43	74F574 +5V-20, 0V-10
G1	22	74AS867 +5V-24, 0V-12
G2	23	74AS867 +5V-24, 0V-12
G3	24	74AS867 +5V-24, 0V-12
G4	45	74HCT593 +5V-20, 0V-10
G5	49	AM 29821 +5V-24, 0V-12
G7	42	74F540 +5V-20, 0V-10

Grid	IC	Description
H1	31	74F04 +5V-14, 0V-7
H2	10	74HCT174 +5V-16, 0V-8
H3	(39)	74F525 +5V-28, 0V-14
H4	58	74AS574 +5V-20, 0V-10
H5	50	2149-35 +5V-18, 0V-9
H6	36	853489 16L8A +5V-20, 0V-10
H7	33	74F163 +5V-16, 0V-8
J1a	11	74HCT574 +5V-20, 0V-10
J1b	46	74HCT574 +5V-20, 0V-10
J2a	9	74HCT574 +5V-20, 0V-10
J2b	47	74HCT574 +5V-20, 0V-10
J3a	82	74HCT74 5V-14, 0V-7
J3b	75	74F74 +5V-14, 0V-7
J4a	3	74F574 +5V-20, 0V-10
J4b	5	74F574 +5V-20, 0V-10
J5a	4	74F574 +5V-20 0V-10
J5b	6	74F574 +5V-20, 0V-10
J7	32	74F163 +5V-16, 0V-8
K1	69	853492 P105A +5V-28, 0V-14
K2	68	853493 P105A +5V-28, 0V-14
K4	76	74HCT74 +5V-14, 0V-7
K5	51	2149-35 +5V-18, 0V-9
K7	12	59·25M CRYSTAL

Grid	IC	Description
L1	67	74HCT153 +5V-16, 0V-8
L2	66	853491 27S33 +5V-18, 0V-9
L3a	48	74HCT574 +5V-20, 0V-10
L3b	71	74F04 +5V-14, 0V-7
L4	52	853909 P105A +5V-28, 0V-14
L5	72	74F244 +5V-20, 0V-10
L6	77	74F08 +5V-14, 0V-7
L7	70	853920 16R4D +5V-20, 0V-10
M5	37	74F86 +5V-14, 0V-7

© CAMBRIDGE INSTRUMENTS LIMITED 1986.
THIS DRAWING IS THE PROPERTY OF THE CAMBRIDGE INSTRUMENT CO LTD GROUP OF COMPANIES WHICH INCLUDE
CAMBRIDGE INSTRUMENTS LTD . U.K CAMBRIDGE INSTRUMENTS GMBH WEST GERMANY CAMBRIDGE INSTRUMENTS SARL FRANCE
CAMBRIDGE INSTRUMENTS INC. U.S.A. THIS DRAWING SHALL NOT BE COPIED OR REPRODUCED IN ANY FORM TO THIRD PERSONS WITHOUT
THE PERMISSION FROM CAMBRIDGE INSTRUMENTS LIMITED
IN THE U.S.A. THIS DRAWING IS LOANED WITH THE EXPRESSED AGREEMENT THAT THE DRAWING AND INFORMATION THEREIN CONTAINED ARE
THE PROPERTY OF CAMBRIDGE INSTRUMENTS INC AND WILL NOT BE REPRODUCED, COPIED, OR OTHERWISE DISPOSED OF DIRECTLY AND WILL
NOT BE USED IN WHOLE OR IN PART TO ASSIST IN MAKING OR TO FURNISH ANY INFORMATION FOR THE MAKING OF DRAWINGS OR PRINTS OR
OTHER REPRODUCTIONS THEREOF OR FOR THE MAKING OF APPARATUS OR PARTS THEREOF EXCEPT UPON WRITTEN PERMISSION OF CAMBRIDGE
INSTRUMENTS INC. FIRST OBTAINED SPECIFIC AS TO EACH CASE. THE ACCEPTANCE OF THIS DRAWING WILL BE CONSTRUED AS AN ACCEPTANCE OF
THE FOREGOING AGREEMENT

LAST COMPONENT REF No
USED

DATE

ISSUE

UNLESS OTHERWISE STATED ALL RESISTORS ARE ¼ WATT 10% TOLERANCE

TITLE
TV TIMING AND HISTOGRAM BOARD
CIRCUIT DIAGRAM

DRN	DATE	
APP	DATE	
TRACED	DATE	
CHKD	DATE 28-2-87	

CAMBRIDGE INSTRUMENTS LIMITED

PRODUCT S360 CODE

CIRCUIT DIAGRAM No
A1 - 853444
SHT1 Page 2 of 2

A31

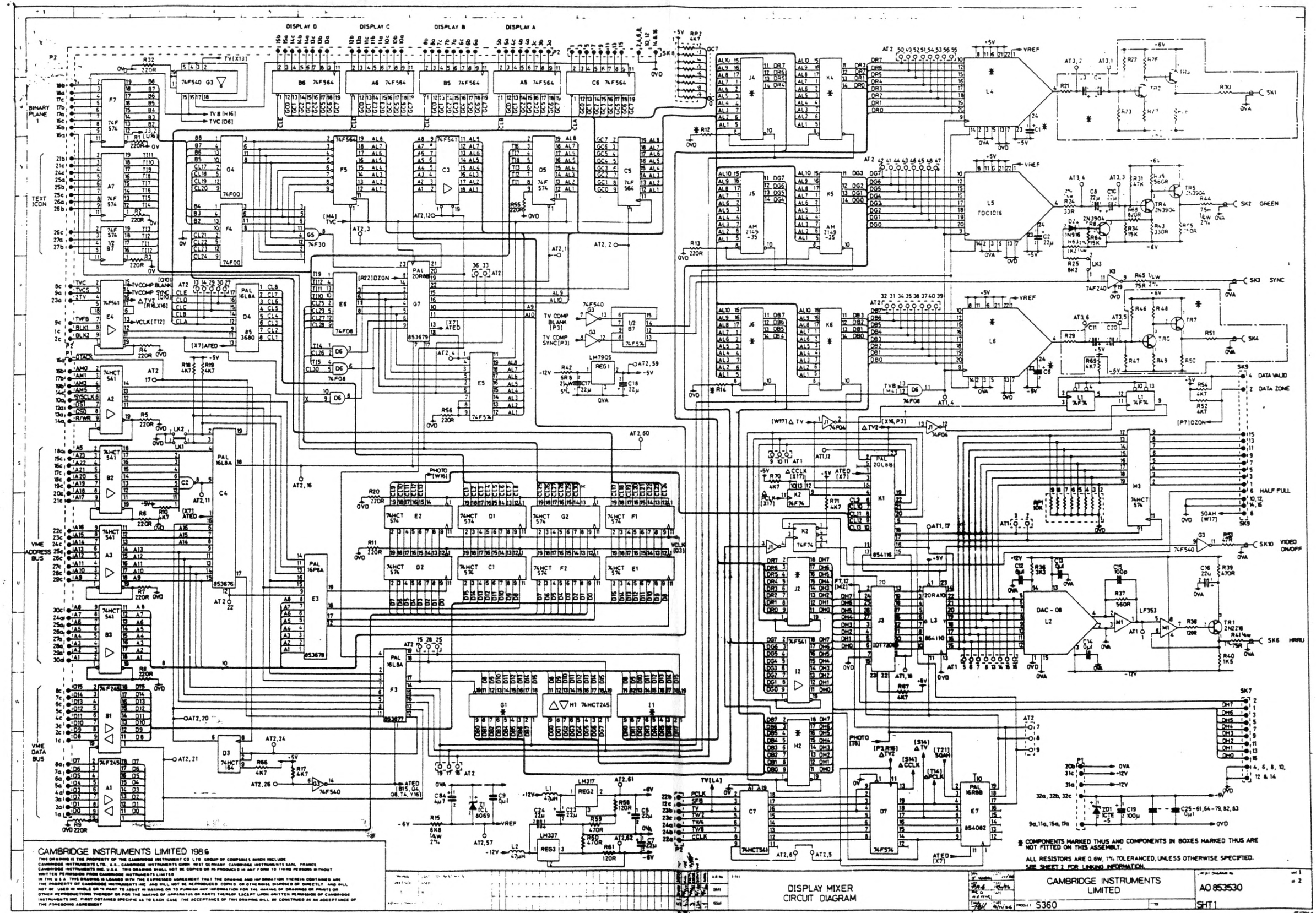

CAMBRIDGE INSTRUMENTS LIMITED 1986

THIS DRAWING IS THE PROPERTY OF THE CAMBRIDGE INSTRUMENT CO LTD GROUP OF COMPANIES WHICH INCLUDE CAMBRIDGE INSTRUMENTS LTD., U.S., CAMBRIDGE INSTRUMENTS GMBH WEST GERMANY CAMBRIDGE INSTRUMENTS SARL FRANCE CAMBRIDGE INSTRUMENTS INC. U.S.A. THIS DRAWING SHALL NOT BE COPIED OR IS PRODUCED IN ANY FORM TO THIRD PERSONS WITHOUT WRITTEN PERMISSION FROM CAMBRIDGE INSTRUMENTS LIMITED

IN THE U.S.A. THIS DRAWING IS LOANED WITH THE EXPRESSED AGREEMENT THAT THE DRAWING AND INFORMATION THEREIN CONTAINED ARE THE PROPERTY OF CAMBRIDGE INSTRUMENTS INC. AND WILL NOT BE REPRODUCED COPIED OR OTHERWISE DISPOSED OF DIRECTLY AND WILL NOT BE USED IN WHOLE OR IN PART TO ASSIST IN MAKING OR TO FURNISH ANY INFORMATION FOR THE MAKING OF DRAWINGS OR PARTS OR OTHER REPRODUCTIONS THEREOF OR FOR THE MAKING OF APPARATUS OR PARTS THEREOF EXCEPT UPON WRITTEN PERMISSION OF CAMBRIDGE INSTRUMENTS INC. FIRST OBTAINED SPECIFIC AS TO EACH CASE. THE ACCEPTANCE OF THIS DRAWING WILL BE CONSTRUED AS AN ACCEPTANCE OF THE FOREGOING AGREEMENT

* COMPONENTS MARKED THUS AND COMPONENTS IN BOXES MARKED THUS ARE NOT FITTED ON THIS ASSEMBLY.

ALL RESISTORS ARE 0.6W, 1% TOLERANCED, UNLESS OTHERWISE SPECIFIED.

SEE SHEET 2 FOR LINKING INFORMATION.

DRAWING No
A1 853530
USE L ON
713907

Grid	IC	Description	0V	+5V	Grid	IC	Description	0V	+5V	Grid	IC	Description	0V	+5V
A1	18	74F245	10	20	E1	40	74HCT574	10	20	J1	97	74F04	7	14
A2	13	74HCT541	10	20	E2	33	74HCT574	10	20	J2	74	*	10	20
A3	15	74HCT541	10	20	E3	41	PAL 853678 16P8A	10	20	J3	79	IDT7201	14	28
					E4	12	74F541	10	20	J4	54	*	9	18
A5	1	74F564	10	20	E5	47	74F574	10	20	J5	56	AM2149-35	9	18
A6	5	74F564	10	20	E6	91	74F08	7	14	J6	58	*	9	18
A7	10	74F574	10	20	E7	100	PAL 854082 16R8B	10	20					
					F1	39	74HCT574	10	20					
B1	17	74F245	10	20	F2	38	74HCT574	10	20	K1	88	PAL 854116 20L8B	12	24
B2	14	74HCT541	10	20	F3	43	PAL 853677 16L8A	10	20	K2	94	74F74	7	14
B3	16	74HCT541	10	20	F4	20	74F00	7	14	K3	95	74F240	10	20
					F5	46	74F564	10	20	K4	55	*	9	18
B5	3	74F564	10	20	F7	9	74F574	10	20	K5	57	AM2149-35	9	18
B6	7	74F564	10	20	G1	64	*	10	20	K6	59	*	9	18
B7	11	74F574	10	20	G2	37	74HCT574	10	20	L1	96	74F74	7	14
					G3	93	74F540	10	20	L2	80	DAC-08	as cct	
C1	36	74HCT574	10	20	G4	19	74F00	7	14	L3	78	PAL 854110 20RA10	12	24
C2	28	74F30	7	14	G5	21	74F30	7	14	L4	67	*	7	6
C3	48	74F541	10	20	G7	44	PAL 853679 20R8-B	12	24	L5	69	TDC 1016	7	6
C4	29	PAL 853676 16L8A	10	20						L6	71	*	7	6
C5	45	74F564	10	20										
C6	83	74F564	10	20	H1	63	74HCT245	10	20	M1	81	LF353	as cct	
C7	98	74HCT541	10	20	H2	76	*	10	20					
										M3	90	74HCT574	10	20
D1	35	74HCT574	10	20										
D2	34	74HCT574	10	20	I1	62	*	10	20					
D3	30	74HCT164	7	14	I2	75	74F541	10	20					
D4	85	PAL 853680 16L8A	10	20										
D5	86	74F574	10	20										
D6	92	74F08	7	14										
D7	99	74F574	10	20										

*:-COMPONENTS MARKED THUS ARE NOT FITTED ON THIS ASSEMBLY

LINK INFORMATION :-

LK1 - MUST BE FITTED FOR CORRECT ADDRESSING.

LK2 - NORMALLY FITTED, REMOVED WHEN PCB IS SUPPLIED AS 2nd MONOCHROME OPTION.

LK3 - MUST BE FITTED FOR COMPOSITE VIDEO/SYNC SIGNAL.

AT2, 5-6 - MUST BE FITTED AFTER TEST.

© CAMBRIDGE INSTRUMENTS LIMITED 1986.
THIS DRAWING IS THE PROPERTY OF THE CAMBRIDGE INSTRUMENTS LTD GROUP OF COMPANIES WHICH INCLUDE CAMBRIDGE INSTRUMENTS LTD U.K. CAMBRIDGE INSTRUMENTS GMBH WEST GERMANY CAMBRIDGE INSTRUMENTS SARL FRANCE CAMBRIDGE INSTRUMENTS INC U.S.A. THIS DRAWING SHALL NOT BE COPIED OR REPRODUCED IN ANY FORM TO THIRD PERSONS WITHOUT THE PERMISSION FROM CAMBRIDGE INSTRUMENTS LIMITED
IN THE U.S.A. THIS DRAWING IS LOANED WITH THE EXPRESSED AGREEMENT THAT THE DRAWING AND INFORMATION THEREIN CONTAINED ARE THE PROPERTY OF CAMBRIDGE INSTRUMENTS INC AND WILL NOT BE REPRODUCED OR PUBLISHED OR OTHERWISE DISPOSED OF DIRECTLY OR INDIRECTLY AND WILL NOT BE USED IN WHOLE OR IN PART TO ASSIST IN MAKING OR TO FURNISH ANY INFORMATION FOR THE MAKING OF DRAWINGS OR PRINTS OR ANY THEREIN PRODUCT FROM THE NEW OR FOR THE MAKING OF APPARATUS OR PARTS THEREOF EXCEPT UPON WRITTEN PERMISSION OF CAMBRIDGE INSTRUMENTS INC. FIRST OBTAINED SPECIFICALLY SUCH RIGHTS AND THE ACCEPTANCE OF THIS DRAWING WILL BE CONSTRUED AS AN ACCEPTANCE OF THE FOREGOING AGREEMENT

DISPLAY MIXER
CIRCUIT DIAGRAM

CAMBRIDGE INSTRUMENTS LIMITED

A1 853530

S360

SHT.1

133

DISPLAY D
DISPLAY C
DISPLAY B
DISPLAY A
BINARY PLANE 1
TEXT ICON
VME ADDRESS BUS
VME DATA BUS
DISPLAY MIXER CIRCUIT DIAGRAM
CAMBRIDGE INSTRUMENTS LIMITED
AO 854360
SHT1
S360
SEE SHEET 2 FOR LINKING INFORMATION.
ALL RESISTORS ARE 0.6W, 1% TOLERANCED, UNLESS OTHERWISE SPECIFIED.
* COMPONENTS MARKED THUS AND COMPONENTS IN BOXES MARKED THUS ARE NOT FITTED ON THIS ASSEMBLY.
SK1
SK2 GREEN
SK3 SYNC
SK4
SK5
SK6 HRRU
SK7
SK8
SK9
SK10 VIDEO ON/OFF
DATA VALID
DATA ZONE
HALF FULL
TV(L4)
TV(X13)
TV B (R16)
TVC (06)
VREF
VCLK (G3)
PCLK
SFB
TV
TVZ
TVA
TVB
CCLK
TV COMP BLANK (P3)
ATV COMP BLANK (D10)
TV COMP BLANK (Y14)
TV COMP SYNC (P3)
ATED (B15, Q4 Q8, 74, Y16)
PHOTO (W16)
PHOTO (T8)
50AH (W17)
ΔCCLK (X17)
ATED (X7)
ΔTV2
ΔTV
ΔCCLK
ΔPCLK
VME ADDRESS BUS
VME DATA BUS
CAMBRIDGE INSTRUMENTS LIMITED 1986
THIS DRAWING IS THE PROPERTY OF THE CAMBRIDGE INSTRUMENT CO LTD. GROUP OF COMPANIES WHICH INCLUDE CAMBRIDGE INSTRUMENTS LTD U.K. CAMBRIDGE INSTRUMENTS GMBH WEST GERMANY CAMBRIDGE INSTRUMENTS SARL FRANCE CAMBRIDGE INSTRUMENTS INC U.S.A. THIS DRAWING SHALL NOT BE COPIED OR REPRODUCED IN ANY FORM TO THING PERSONS WITHOUT WRITTEN PERMISSION FROM CAMBRIDGE INSTRUMENTS LIMITED.
IN THE U.S.A. THIS DRAWING IS LOANED WITH THE EXPRESSED AGREEMENT THAT THE DRAWING AND INFORMATION THEREIN CONTAINED ARE THE PROPERTY OF CAMBRIDGE INSTRUMENTS INC AND WILL NOT BE REPRODUCED, COPIED OR OTHERWISE DISPOSED OF DIRECTLY AND WILL NOT BE USED IN WHOLE OR IN PART TO ASSIST IN MAKING OR TO FURNISH ANY INFORMATION FOR THE MAKING OF DRAWINGS OR PRINTS OR OTHER REPRODUCTIONS THEREOF OR FOR THE MAKING OF APPARATUS OR PARTS THEREOF EXCEPT UPON WRITTEN PERMISSION OF CAMBRIDGE INSTRUMENTS INC FIRST OBTAINED SPECIFIC AS TO EACH CASE. THE ACCEPTANCE OF THIS DRAWING WILL BE CONSTRUED AS AN ACCEPTANCE OF THE FOREGOING AGREEMENT

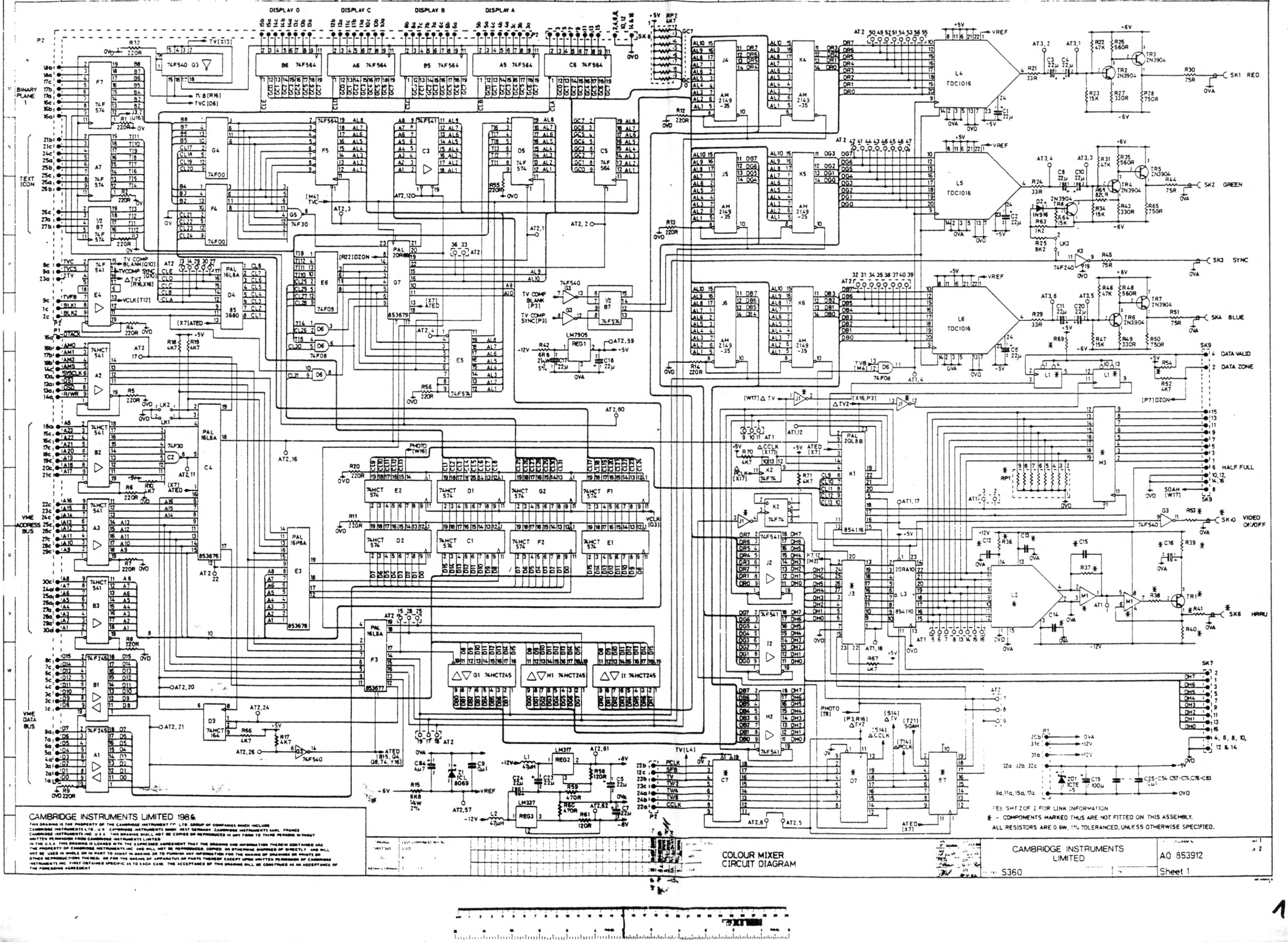
DISPLAY D
DISPLAY C
DISPLAY B
DISPLAY A
BINARY PLANE 1
TEXT ICON
VME ADDRESS BUS
VME DATA BUS
B6 74F564
A6 74F564
B5 74F564
A5 74F564
C6 74F564
SK8
SK1 RED
SK2 GREEN
SK3 SYNC
SK4 BLUE
SK9
DATA VALID
DATA ZONE
HALF FULL
SK10 VIDEO ON/OFF
SK6 HARU
SK7
L4 TDC1016
L5 TDC1016
L6 TDC1016
L2
L3
PAL 20R8B
PAL 16L8A
PAL 16P8A
PAL 20L8B
LM7905
LM317
LM337
74F540
74HCT245
74F574
74HCT574
74F541
74HCT541
74F245
74HCT245
74F30
74F08
74F00
74F541
74F574
74F564
74HCT164
AM 2149 -35
TV COMP BLANK [P3]
TV COMP SYNC[P3]
[W17] △ TV
△TV2
△CCLK [X17]
PCLK [X17]
[X7] ATED
[W16] PHOTO
[M4] TVC
[R22] DZON
[X7] ATED
[T14] △PCLK
[S14] △TV
[T21] SOAH
[P3,R16] △TV2
[X16,P3]
[P71DZON]
[W17] SOAH
[M2]
[M4]
[T8]
[R15,Q4, Q8,T4,Y16]
[TV(L4)]
[TV(R13)]
[TV 8 [R16]
[TVC [06]
[X7]ATED
[M4] TVC
[R22]DZON
[X7] ATED
[W16] PHOTO
[W17] △ TV
[X16,P3]
[P71DZON]
[W17] SOAH
[T14] △PCLK
[S14] △TV
[T21] SOAH
[P3,R16] △TV2
[S14] △CCLK
[M2]
[T8]
[R15,Q4, Q8,T4,Y16]
[TV(L4)]
[TV(R13)]
[TV 8 [R16]
[TVC [06]
TV COMP BLANK [Q10]
TV COMP SYNC [Q10]
△TV2 [R16,X16]
VCLK [T12]
[X7]ATED
STACK
LK1
LK2
LK3
VCLK [G3]
PHOTO [W16]
ATED [R15, Q4, Q8, T4, Y16]
REG1
REG2
REG3
Z1 ICL 8069
ZD1 ICTE -5
R1 220R
R2 220R
R3 220R
R4 220R
R5 220R
R6 220R
R7 220R
R8 220R
R9 220R
R10 4K7
R11 220R
R12 220R
R13 220R
R14 220R
R16 4K7
R17 4K7
R18 4K7
R19 4K7
R20 220R
R21 33R
R22 47K
R23 15K
R24 33R
R25 8K2
R26 560R
R27 330R
R28 750R
R29 33R
R30 75R
R31 47K
R34 15K
R35 560R
R36 82R
R37 82R
R38 82R
R40 75R
R41 75R
R42 6R8 2W 5%
R43 330R
R44 75R
R45 75R
R46 47K
R47 15K
R48 560R
R49 330R
R50 750R
R51 75R
R52 4K7
R53 75R
R54 75R
R55 220R
R56 220R
R57 120R
R58 120R
R59 470R
R60 470R
R61 120R
R63 1K2
R64 15K
R65 750R
R66 4K7
R67 4K7
R69 15K
R70 4K7
R71 4K7
RP1 4K7
RP2 4K7
C1 22µ
C2 22µ
C3 22µ
C4 22µ
C5 22µ
C6 22µ
C7 22µ
C8 22µ
C9 0µ1
C10 22µ
C11 22µ
C12 0µ1
C13 0µ1
C14 0µ1
C15 0µ1
C16 0µ1
C17 22µ
C18 22µ
C19 100µ
C20 22µ
C21 22µ
C22 22µ
C23 22µ
C24 22µ
C25-C54 C57-C74,C76-C83 0µ1
C84 4µ7
L1 47µH
L2 47µH
TR1 2N3904
TR2 2N3904
TR3 2N3904
TR4 2N3904
TR5 2N3904
TR6 2N3904
TR7 2N3904
TR8 2N3904
D1 1N916
D2 1N916
SEE SHT 2 OF 2 FOR LINK INFORMATION
* - COMPONENTS MARKED THUS ARE NOT FITTED ON THIS ASSEMBLY.
ALL RESISTORS ARE 0.6W, 1% TOLERANCED, UNLESS OTHERWISE SPECIFIED.
CAMBRIDGE INSTRUMENTS LIMITED 1986
THIS DRAWING IS THE PROPERTY OF THE CAMBRIDGE INSTRUMENTS GP LTD GROUP OF COMPANIES WHICH INCLUDE CAMBRIDGE INSTRUMENTS LTD., U.K. CAMBRIDGE INSTRUMENTS GMBH WEST GERMANY. CAMBRIDGE INSTRUMENTS SARL FRANCE CAMBRIDGE INSTRUMENTS INC U.S.A. THIS DRAWING SHALL NOT BE COPIED OR REPRODUCED IN ANY FORM TO THIRD PERSONS WITHOUT WRITTEN PERMISSION FROM CAMBRIDGE INSTRUMENTS LIMITED.
IN THE U.S.A. THIS DRAWING IS LOANED WITH THE EXPRESSED AGREEMENT THAT THE DRAWING AND INFORMATION THEREIN CONTAINED ARE THE PROPERTY OF CAMBRIDGE INSTRUMENTS INC AND WILL NOT BE REPRODUCED, COPIED OR OTHERWISE DISPOSED OF DIRECTLY AND WILL NOT BE USED IN WHOLE OR IN PART TO ASSIST IN MAKING OR TO FURNISH ANY INFORMATION FOR THE MAKING OF DRAWINGS OR PRINTS OR OTHER REPRODUCTIONS THEREOF OR FOR THE MAKING OF APPARATUS OR PARTS THEREOF EXCEPT UPON WRITTEN PERMISSION OF CAMBRIDGE INSTRUMENTS INC FIRST OBTAINED SPECIFIC AS TO EACH CASE. THE ACCEPTANCE OF THIS DRAWING SHALL BE CONSTRUED AS AN ACCEPTANCE OF THE FOREGOING AGREEMENT.
COLOUR MIXER CIRCUIT DIAGRAM
CAMBRIDGE INSTRUMENTS LIMITED
S360
A0 853912
Sheet 1

135

DRAWING No A1 853912 SHEET 1

USED ON

Grid	IC	Description	0V	+5V	Grid	IC	Description	0V	+5V	Grid	IC	Description	0V	+5V
A1	18	74F245	10	20	E1	40	74HCT574	10	20	J1	97	*	7	14
A2	13	74HCT541	10	20	E2	33	74HCT574	10	20	J2	74	74F541	10	20
A3	15	74HCT541	10	20	E3	41	PAL 853678 16P8A	10	20	J3	79	*	14	28
					E4	12	74F541	10	20	J4	54	AM2149-35	9	18
A5	1	74F564	10	20	E5	47	74F574	10	20	J5	56	AM2149-35	9	18
A6	5	74F564	10	20	E6	91	74F08	7	14	J6	58	AM2149-35	9	18
A7	10	74F574	10	20	E7	100	*	10	20					
					F1	39	74HCT574	10	20					
B1	17	74F245	10	20	F2	38	74HCT574	10	20	K1	88	PAL 854116 20L8B	12	24
B2	14	74HCT541	10	20	F3	43	PAL 853677 16L8A	10	20	K2	94	74F74	7	14
B3	16	74HCT541	10	20	F4	20	74F00	7	14	K3	95	74F240	10	20
					F5	46	74F564	10	20	K4	55	AM2149-35	9	18
B5	3	74F564	10	20	F7	9	74F574	10	20	K5	57	AM2149-35	9	18
B6	7	74F564	10	20	G1	64	74HCT245	10	20	K6	59	AM2149-35	9	18
B7	11	74F574	10	20	G2	37	74HCT574	10	20	L1	96	*	7	14
					G3	93	74F540	10	20	L2	80	*	as cct	
C1	36	74HCT574	10	20	G4	19	74F00	7	14	L3	78	*	12	24
C2	28	74F30	7	14	G5	21	74F30	7	14	L4	67	TDC 1016	7	6
C3	48	74F541	10	20	G7	44	PAL 853679 20R8-B	12	24	L5	69	TDC 1016	7	6
C4	29	PAL 853676 16L8A	10	20						L6	71	TDC 1016	7	6
C5	45	74F564	10	20										
C6	83	74F564	10	20	H1	63	74HCT245	10	20	M1	81	*	as cct	
C7	98	*	10	20	H2	76	74F541	10	20					
										M3	90	*	10	20
D1	35	74HCT574	10	20										
D2	34	74HCT574	10	20	I1	62	74HCT245	10	20					
D3	30	74HCT164	7	14	I2	75	74F541	10	20					
D4	85	PAL 853680 16L8A	10	20										
D5	86	74F574	10	20										
D6	92	74F08	7	14										
D7	99	*	10	20										

* :- COMPONENTS MARKED THUS ARE NOT FITTED ON THIS ASSEMBLY

LINK INFORMATION

LK1 MUST NOT BE FITTED ON THIS ASSEMBLY

LK2 NORMALLY FITTED, REMOVED ONLY WHEN BOARD SUPPLIED AS SECOND COLOUR OPTION

LK3 MUST BE FITTED FOR COMPOSITE VIDEO/SYNC. SIGNAL IN GREEN CHANNEL

AT2,5-AT2,6 NOT FITTED ON THIS ASSEMBLY

© CAMBRIDGE INSTRUMENTS LIMITED 1986.

THIS DRAWING IS THE PROPERTY OF THE CAMBRIDGE INSTRUMENT CO. LTD GROUP OF COMPANIES WHICH INCLUDE CAMBRIDGE INSTRUMENTS LTD., U.S.E., CAMBRIDGE INSTRUMENTS GmbH, WEST GERMANY, CAMBRIDGE INSTRUMENTS SARL, FRANCE CAMBRIDGE INSTRUMENTS INC. U.S.A. THIS DRAWING SHALL NOT BE COPIED OR REPRODUCED IN ANY FORM TO THIRD PERSONS WITHOUT WRITTEN PERMISSION FROM CAMBRIDGE INSTRUMENTS LIMITED.
IN THE U.S.A. THIS DRAWING IS LOANED WITH THE EXPRESSED AGREEMENT THAT THE DRAWING AND INFORMATION THEREIN CONTAINED ARE THE PROPERTY OF CAMBRIDGE INSTRUMENTS INC. AND WILL NOT BE REPRODUCED, COPIED, OR OTHERWISE DISPOSED OF DIRECTLY AND WILL NOT BE USED IN WHOLE OR IN PART TO ASSIST IN MAKING OR TO FURNISH ANY INFORMATION FOR THE MAKING OF DRAWINGS OR PRINTS OR OTHER REPRODUCTIONS THEREOF OR FOR THE MAKING OF APPARATUS OR PARTS THEREOF EXCEPT UPON WRITTEN PERMISSION OF CAMBRIDGE INSTRUMENTS INC. FIRST OBTAINED SPECIFIC AS TO EACH CASE. THE ACCEPTANCE OF THIS DRAWING WILL BE CONSTRUED AS AN ACCEPTANCE OF THE FOREGOING AGREEMENT

LAST COMPONENT REF No USED

5	24/2/89	R.M.H.	INITIAL	P/N
4	21/4/87	R.M.H.		
3	11/11/86	R.M.H.		DATE
2	14/10/86	R.M.H.		
1	9/9/86	R.M.H.		ISSUE

TITLE: COLOUR MIXER CIRCUIT DIAGRAM

DRN	DATE 7/11/86	CAMBRIDGE INSTRUMENTS LIMITED	DRAWING No A1 853912 SHT 2 OF 2
APP	DATE 24/11/86		
PROJ	DATE 24/11/86		
CHK	DATE 18/11/86	SYSTEM S360	SHT.1

136

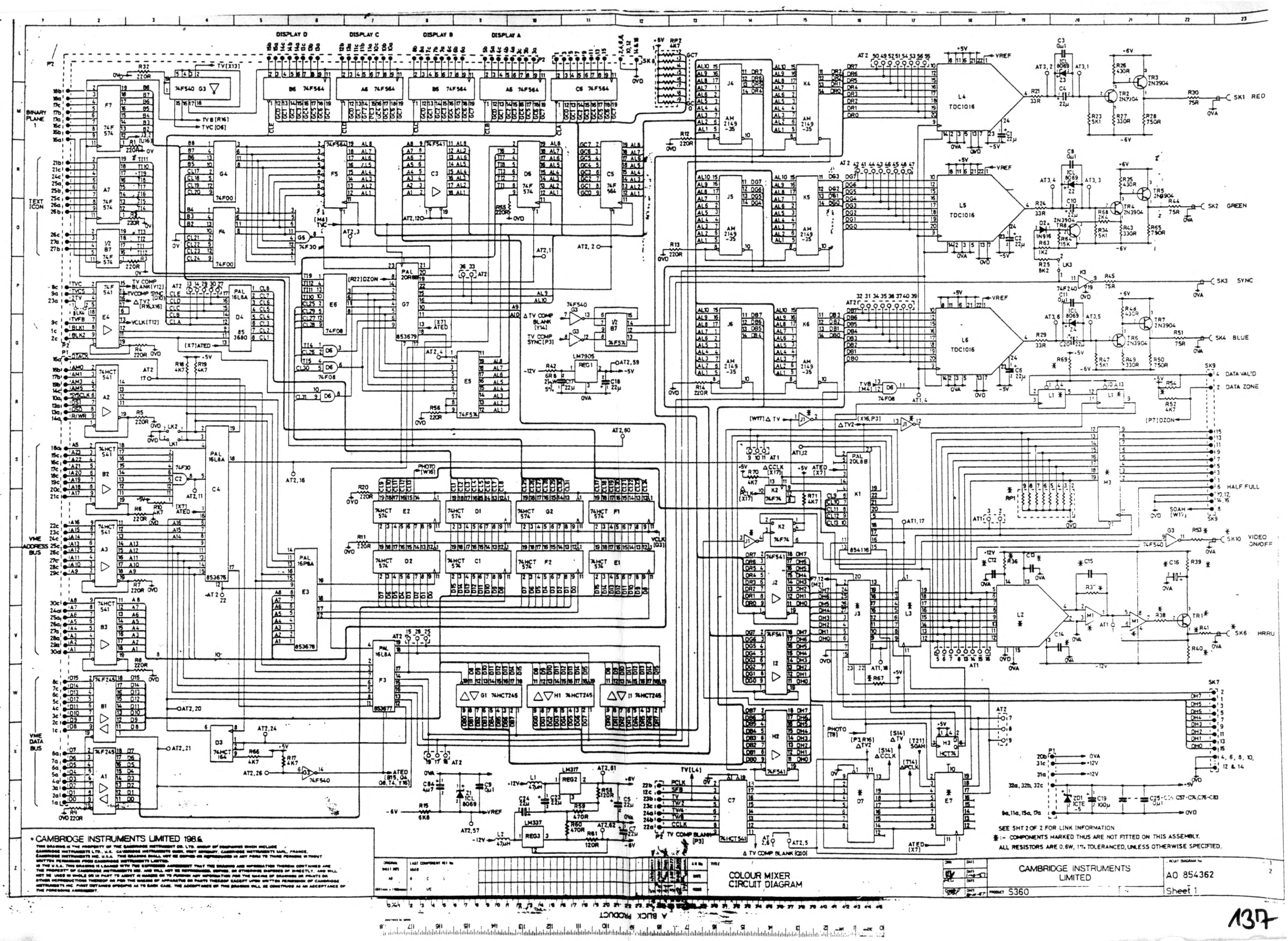
DISPLAY D
DISPLAY C
DISPLAY B
DISPLAY A
BINARY PLANE 1
TEXT ICON
VME ADDRESS BUS
VME DATA BUS
SK1 RED
SK2 GREEN
SK3 SYNC
SK4 BLUE
DATA VALID
DATA ZONE
HALF FULL
VIDEO ON/OFF
SK6 HRRU
SEE SHT 2 OF 2 FOR LINK INFORMATION
*:- COMPONENTS MARKED THUS ARE NOT FITTED ON THIS ASSEMBLY.
ALL RESISTORS ARE 0.6W, 1% TOLERANCED, UNLESS OTHERWISE SPECIFIED.
• CAMBRIDGE INSTRUMENTS LIMITED 1986
COLOUR MIXER
CIRCUIT DIAGRAM
CAMBRIDGE INSTRUMENTS LIMITED
PRODUCT S360
A0 854362
Sheet 1

137

DRAWING No A1 854362 SHEET 1 2 of 2

USED ON

Grid	IC	Description	0V	+5V	Grid	IC	Description	0V	+5V	Grid	IC	Description	0V	+5V
A1	18	74F245	10	20	E1	40	74HCT574	10	20	J1	97	*	7	14
A2	13	74HCT541	10	20	E2	33	74HCT574	10	20	J2	74	74F541	10	20
A3	15	74HCT541	10	20	E3	41	PAL 853678 16P8A	10	20	J3	79	*	14	28
					E4	12	74F541	10	20	J4	54	AM2149-35	9	18
A5	1	74F564	10	20	E5	47	74F574	10	20	J5	56	AM2149-35	9	18
A6	5	74F564	10	20	E6	91	74F08	7	14	J6	58	AM2149-35	9	18
A7	10	74F574	10	20	E7	100	*	10	20					
					F1	39	74HCT574	10	20					
B1	17	74F245	10	20	F2	38	74HCT574	10	20	K1	88	PAL 854116 20L8B	12	24
B2	14	74HCT541	10	20	F3	43	PAL 853677 16L8A	10	20	K2	94	74F74	7	14
B3	16	74HCT541	10	20	F4	20	74F00	7	14	K3	95	74F240	10	20
					F5	46	74F564	10	20	K4	55	AM2149-35	9	18
B5	3	74F564	10	20	F7	9	74F574	10	20	K5	57	AM2149-35	9	18
B6	7	74F564	10	20	G1	64	74HCT245	10	20	K6	59	AM2149-35	9	18
B7	11	74F574	10	20	G2	37	74HCT574	10	20	L1	96	*	7	14
					G3	93	74F540	10	20	L2	80	*	as cct	
C1	36	74HCT574	10	20	G4	19	74F00	7	14	L3	78	*	10	20
C2	28	74F30	7	14	G5	21	74F30	7	14	L4	67	TDC 1016	7	6
C3	48	74F541	10	20	G7	44	PAL 853679 20R8-B	12	24	L5	69	TDC 1016	7	6
C4	29	PAL 853676 16L8A	10	20						L6	71	TDC 1016	7	6
C5	45	74F564	10	20										
C6	83	74F564	10	20	H1	63	74HCT245	10	20	M1	81	*	as cct	
C7	98	74HCT541	10	20	H2	76	74F541	10	20					
					H3	2	74HCT74	7	14	M3	90	*	10	20
D1	35	74HCT574	10	20										
D2	34	74HCT574	10	20	I1	62	74HCT245	10	20					
D3	30	74HCT164	7	14	I2	75	74F541	10	20					
D4	85	PAL 853680 16L8A	10	20										
D5	86	74F574	10	20										
D6	92	74F08	7	14										
D7	99	*	10	20										

*:- COMPONENTS MARKED THUS ARE NOT FITTED ON THIS ASSEMBLY

LINK INFORMATION

LK1 NORMALLY FITTED, REMOVED ONLY WHEN BOARD SUPPLIED AS SECOND COLOUR OPTION

LK2 MUST NOT BE FITTED ON THIS ASSEMBLY

LK3 MUST BE FITTED FOR COMPOSITE VIDEO/SYNC. SIGNAL IN GREEN CHANNEL

AT2,5-AT2,6 NOT FITTED ON THIS ASSEMBLY

LK4 MUST NOT BE FITTED ON THIS ASSEMBLY

CAMBRIDGE INSTRUMENTS LIMITED 1986.
THE PROPERTY OF THE CAMBRIDGE INSTRUMENT CO. LTD. GROUP OF COMPANIES WHICH INCLUDE ... INSTRUMENTS LTD., U.K., CAMBRIDGE INSTRUMENTS GMBH, WEST GERMANY, CAMBRIDGE INSTRUMENTS SARL, FRANCE, ... INSTRUMENTS INC. U.S.A. THIS DRAWING SHALL NOT BE COPIED OR REPRODUCED IN ANY FORM TO THIRD PERSONS WITHOUT ... PERMISSION FROM CAMBRIDGE INSTRUMENTS LIMITED. ... U.S.A. THIS DRAWING IS LOANED WITH THE EXPRESSED AGREEMENT THAT THE DRAWING AND INFORMATION THEREIN CONTAINED ARE ... OF CAMBRIDGE INSTRUMENTS INC. AND WILL NOT BE REPRODUCED, COPIED, OR OTHERWISE DISPOSED OF DIRECTLY, AND WILL ... USED IN WHOLE OR IN PART TO ASSIST IN MAKING OR TO FURNISH ANY INFORMATION FOR THE MAKING OF DRAWINGS OR PRINTS OR ... REPRODUCTIONS THEREOF OR FOR THE MAKING OF APPARATUS OR PARTS THEREOF EXCEPT UPON WRITTEN PERMISSION OF CAMBRIDGE ... INSTRUMENTS INC. FIRST OBTAINED SPECIFIC AS TO EACH CASE. THE ACCEPTANCE OF THIS DRAWING WILL BE CONSTRUED AS AN ACCEPTANCE OF ... FOREGOING AGREEMENT.

LAST COMPONENT REF No USED

R C L

T I/C

5	26477	C/N No
4	24133	
3	24677	DATE
2	24592	
1	INITIAL	ISSUE

TITLE
COLOUR MIXER
CIRCUIT DIAGRAM

DRN	DATE	
APP	DATE 11/04/87	CAMBRIDGE INSTRUMENTS LIMITED
FIELD	DATE	
CHKD	DATE 29-9-87	PRODUCT S360 CODE

CIRCUIT DIAGRAM No A1 854362
SHT.1 2 of 2

A BLICK PRODUCT

X38

DRAWING No
A1 - 854270 Sh.1

USED ON
713899

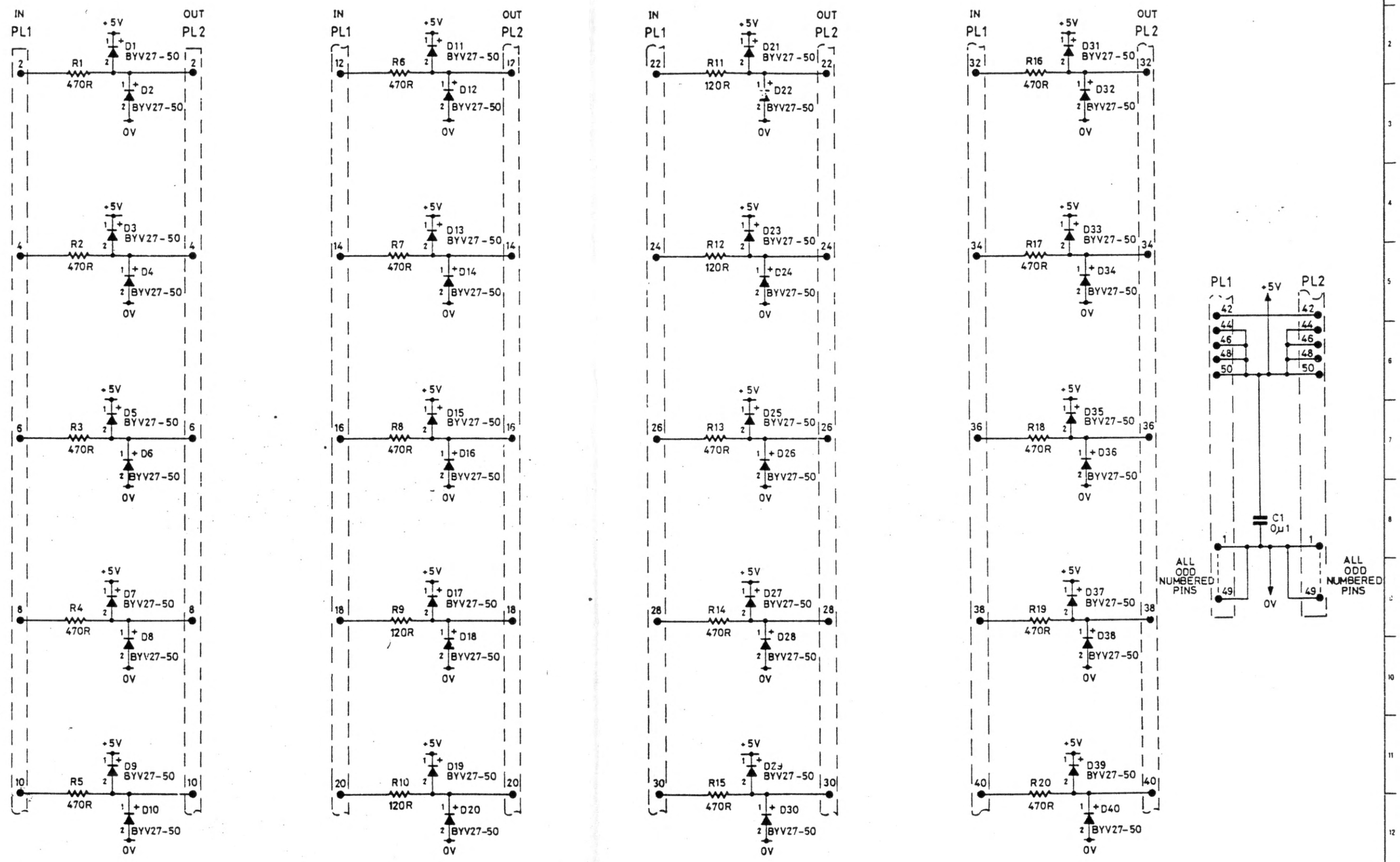

© CAMBRIDGE INSTRUMENTS LIMITED 1987.

THIS DRAWING IS THE PROPERTY OF THE CAMBRIDGE INSTRUMENT CO. LTD. GROUP OF COMPANIES WHICH INCLUDE CAMBRIDGE INSTRUMENTS LTD., U.K., CAMBRIDGE INSTRUMENTS GMBH, WEST GERMANY, CAMBRIDGE INSTRUMENTS SARL, FRANCE, CAMBRIDGE INSTRUMENTS INC. U.S.A. THIS DRAWING SHALL NOT BE COPIED OR REPRODUCED IN ANY FORM TO THIRD PERSONS WITHOUT WRITTEN PERMISSION FROM CAMBRIDGE INSTRUMENTS LIMITED.
IN THE U.S.A. THIS DRAWING IS LOANED WITH THE EXPRESSED AGREEMENT THAT THE DRAWING AND INFORMATION THEREIN CONTAINED ARE THE PROPERTY OF CAMBRIDGE INSTRUMENTS INC. AND WILL NOT BE REPRODUCED, COPIED, OR OTHERWISE DISPOSED OF DIRECTLY, AND WILL NOT BE USED IN WHOLE OR IN PART TO ASSIST IN MAKING OR TO FURNISH ANY INFORMATION FOR THE MAKING OF DRAWINGS OR PRINTS OR OTHER REPRODUCTIONS THEREOF OR FOR THE MAKING OF APPARATUS OR PARTS THEREOF EXCEPT UPON WRITTEN PERMISSION OF CAMBRIDGE INSTRUMENTS INC. FIRST OBTAINED SPECIFIC AS TO EACH CASE. THE ACCEPTANCE OF THIS DRAWING WILL BE CONSTRUED AS AN ACCEPTANCE OF THE FOREGOING AGREEMENT.

LAST COMPONENT REF No
USED
R20 C1 L
T I/C D40

C/N No	DATE	ISSUE
3	4-6-87	28531
2	11-5-87	21182
1	11-5-87	INITIAL

UNLESS OTHERWISE STATED ALL RESISTORS ARE 1/2 WATT 2% TOLERANCED

TITLE
P.I.A. BUFFER P.C.B.
CIRCUIT DIAGRAM

DRN	DATE 7.5.87	CAMBRIDGE INSTRUMENTS LIMITED
APP	DATE 11-05-87	
TRACED	DATE	
CHKD	DATE 12-5-87	PRODUCT S360 CODE

CIRCUIT DIAGRAM No
A1 - 854270
Sheet 1
SHT
OF

DRAWING No
A1 - 854424 sht 1
USED ON
717984

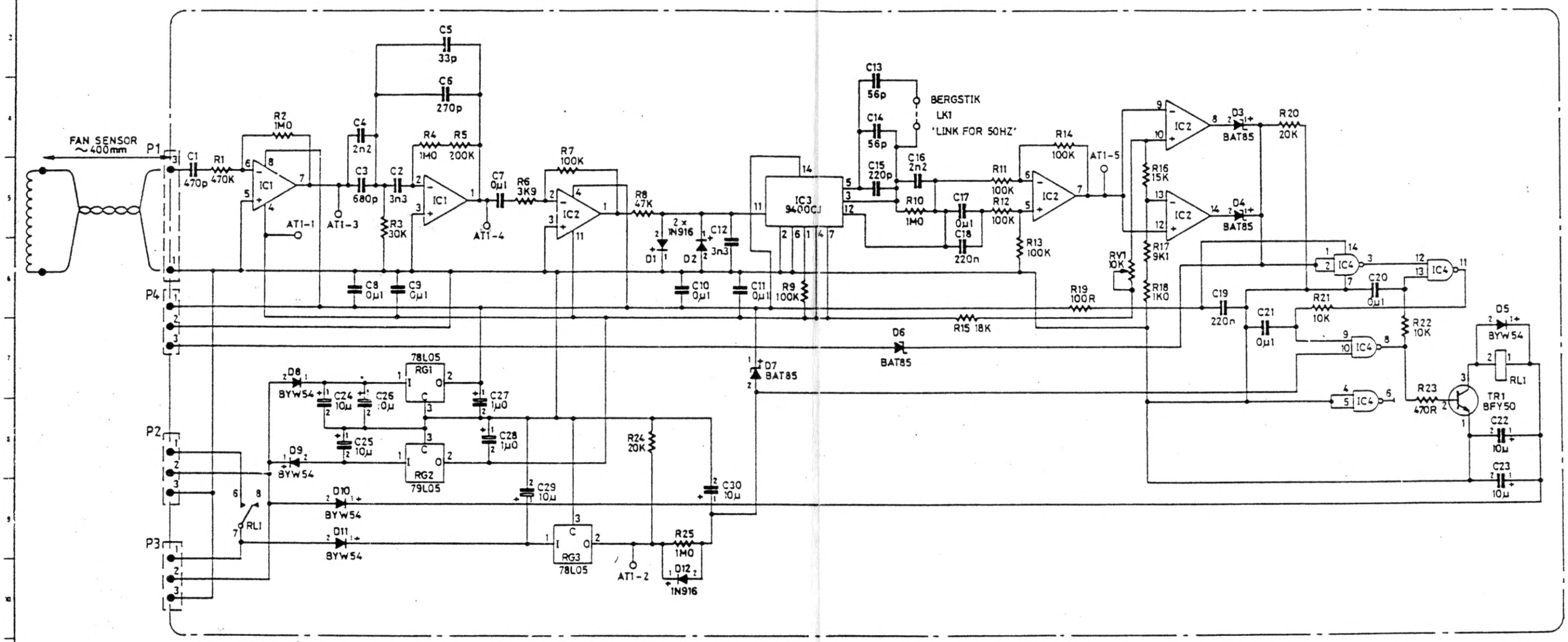

IC1	LF353 as diagram	IC3	9400CJ as diagram
IC2	LM324N as diagram	IC4	74HC132 as diagram

© CAMBRIDGE INSTRUMENTS LIMITED 1987.
THIS DRAWING IS THE PROPERTY OF THE CAMBRIDGE INSTRUMENT CO. LTD. GROUP OF COMPANIES WHICH INCLUDE CAMBRIDGE INSTRUMENTS LTD., U.K., CAMBRIDGE INSTRUMENTS GMBH, WEST GERMANY, CAMBRIDGE INSTRUMENTS SARL, FRANCE, CAMBRIDGE INSTRUMENTS INC. U.S.A. THIS DRAWING SHALL NOT BE COPIED OR REPRODUCED IN ANY FORM TO THIRD PERSONS WITHOUT WRITTEN PERMISSION FROM CAMBRIDGE INSTRUMENTS LIMITED.
IN THE U.S.A. THIS DRAWING IS LOANED WITH THE EXPRESSED AGREEMENT THAT THE DRAWING AND INFORMATION THEREIN CONTAINED ARE THE PROPERTY OF CAMBRIDGE INSTRUMENTS INC. AND WILL NOT BE REPRODUCED, COPIED, OR OTHERWISE DISPOSED OF DIRECTLY, AND WILL NOT BE USED IN WHOLE OR IN PART TO ASSIST IN MAKING OR TO FURNISH ANY INFORMATION FOR THE MAKING OF DRAWINGS OR PRINTS OR OTHER REPRODUCTIONS THEREOF OR FOR THE MAKING OF APPARATUS OR PARTS THEREOF EXCEPT UPON WRITTEN PERMISSION OF CAMBRIDGE INSTRUMENTS INC. FIRST OBTAINED SPECIFIC AS TO EACH CASE. THE ACCEPTANCE OF THIS DRAWING WILL BE CONSTRUED AS AN ACCEPTANCE OF THE FOREGOING AGREEMENT

LAST COMPONENT REF No
USED
R25 C30 L
T I/C 4
DIR.

24915	24828		C/N No
7480	7480		DATE
3	3		ISSUE

~~UNLESS OTHERWISE STATED ALL DIMENSIONS ARE IN MM. ALL TOLERANCES~~

TITLE
FAN FAIL DETECTOR
CIRCUIT DIAGRAM

DRN	DATE 1/10/87	CAMBRIDGE INSTRUMENTS LIMITED
APP	DATE 13-11-87	
TRACED	DATE	
CHKD	DATE 2-11-87	PRODUCT S360 CODE

CIRCUIT DIAGRAM No
A1 - 854424
Sheet 1
SHT
OF

140

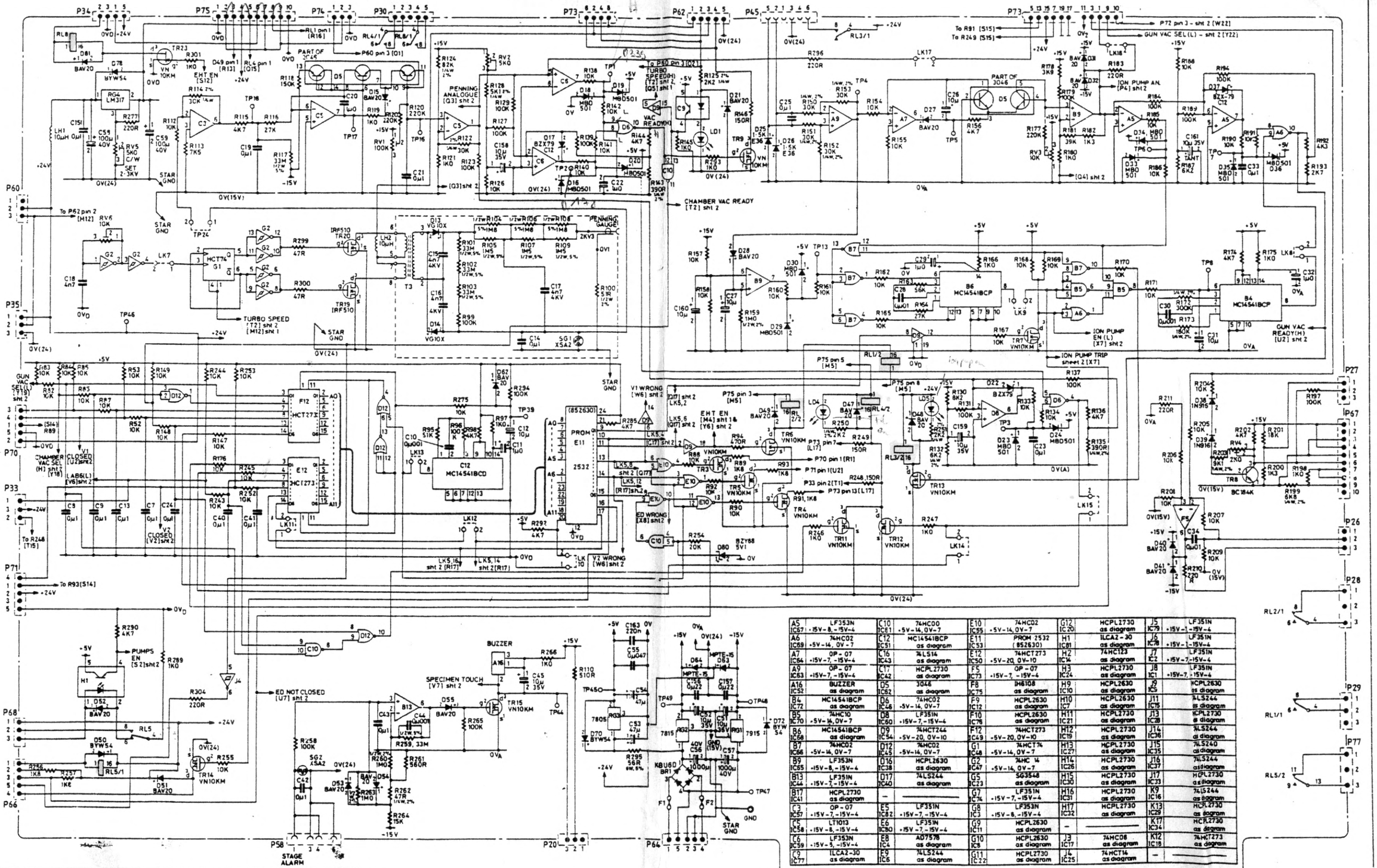
P34
P75
P74
P30
P73
P62
P45
P73
P60
P35
P70
P33
P71
P68
P66
P58
P20
P64
P27
P67
P26
P28
P29
P77
P72 pin 3 - sht 2 (W22)
GUN VAC SEL (L) - sht 2 (Y22)
To R91 (S15)
To R249 (S15)
CHAMBER VAC READY [T2] sht 2
TURBO SPEED [T2] sht 2 [M12] sht 1
STAR GND
PENNING GAUGE
ION PUMP TRIP sheet 2 [X7]
ION PUMP EN (L) [X7] sht 2
GUN VAC READY(H) [U2] sht 2
ION PUMP AN. [P4] sht 2
EHT EN [S12]
VAC READY(H)
PENNING ANALOGUE [Q3] sht 2
TURBO SPEED(H) [T2] sht 2, [Q5] sht 1
V1 WRONG [W6] sht 2
V2 WRONG [W6] sht 2
ED WRONG [X8] sht 2
ED NOT CLOSED [U7] sht 2
SPECIMEN TOUCH [V7] sht 2
PUMPS EN [S2] sht 2
STAGE ALARM
PROM E11 (852630)
MC14541BCP
HCT74
HCT273
HCT245
LF353N
74HC00
74HC02
74LS14
74LS244
74HCT244
74HCT273
74HC14
74HC08
74HCT14
HCPL2730
HCPL2630
ILCA2-30
LT1013
AD7578
BZX79
BZY88
BAV20
MBD501
IRF510
VN10KM
BC184K
1N916
1N5819
MPTE-15
RL1/2
RL2/1
RL3/1
RL3/2
RL4/1
RL4/2
RL5/1
RL5/2
RL6/1
RL7/1
RL7/2
RL8/1
RL8/2
LK1
LK2
LK3
LK4
LK5
LK6
LK7
LK8
LK9
LK10
LK11
LK12
LK13
LK14
LK15
LK16
LK17
LK18
TP1
TP2
TP3
TP4
TP5
TP6
TP7
TP8
TP9
TP13
TP16
TP17
TP18
TP24
TP39
TP44
TP45
TP46
TP47
TP48
TP49
CHAMBER VAC SET (H) sht 2 [Y18]
LAB6(L) [V6] sht 2
V1 CLOSED [U2] sht 2
V2 CLOSED [V2] sht 2
To R248 [T15]
To R93 [S14]
To P62 pin 2 [M12]
To P50 pin 3 [Q1]
P60 pin 3 [Q1]
D49 pin 1 [R13]
RL4 pin 1 [Q15]
RL1 pin 1 [R16]
P75 pin 5 [M5]
P75 pin 8 [M5]
P75 pin 3 [M5]
P73 pin 7 [L17]
P70 pin 1 [R1]
P71 pin 1 [U2]
P33 pin 2 [T1]
P73 pin 13 [L17]
[Q4] sht 2
[Q3] sht 2
[R17] sht 2
[Y6] sht 1 & [M4] sht 1
[Q7] sht 2
[Q5] sht 1
[X7] sht 2
[M5]
[M12] sht 1
[T2] sht 2
[U7] sht 2
[V7] sht 2
[S2] sht 2
[W6] sht 2
[X8] sht 2
[R17] sht 2
[Y18]
[V6] sht 2
[U2] sht 2
[V2] sht 2
[T15]
[S14]
[M12]
[Q1]
[R16]
[R13]
[Q15]
[M5]
[L17]
[R1]
[U2]
[T1]
[Q4] sht 2
[Q3] sht 2
[R17] sht 2
[M4] sht 1 & [Y6] sht 2

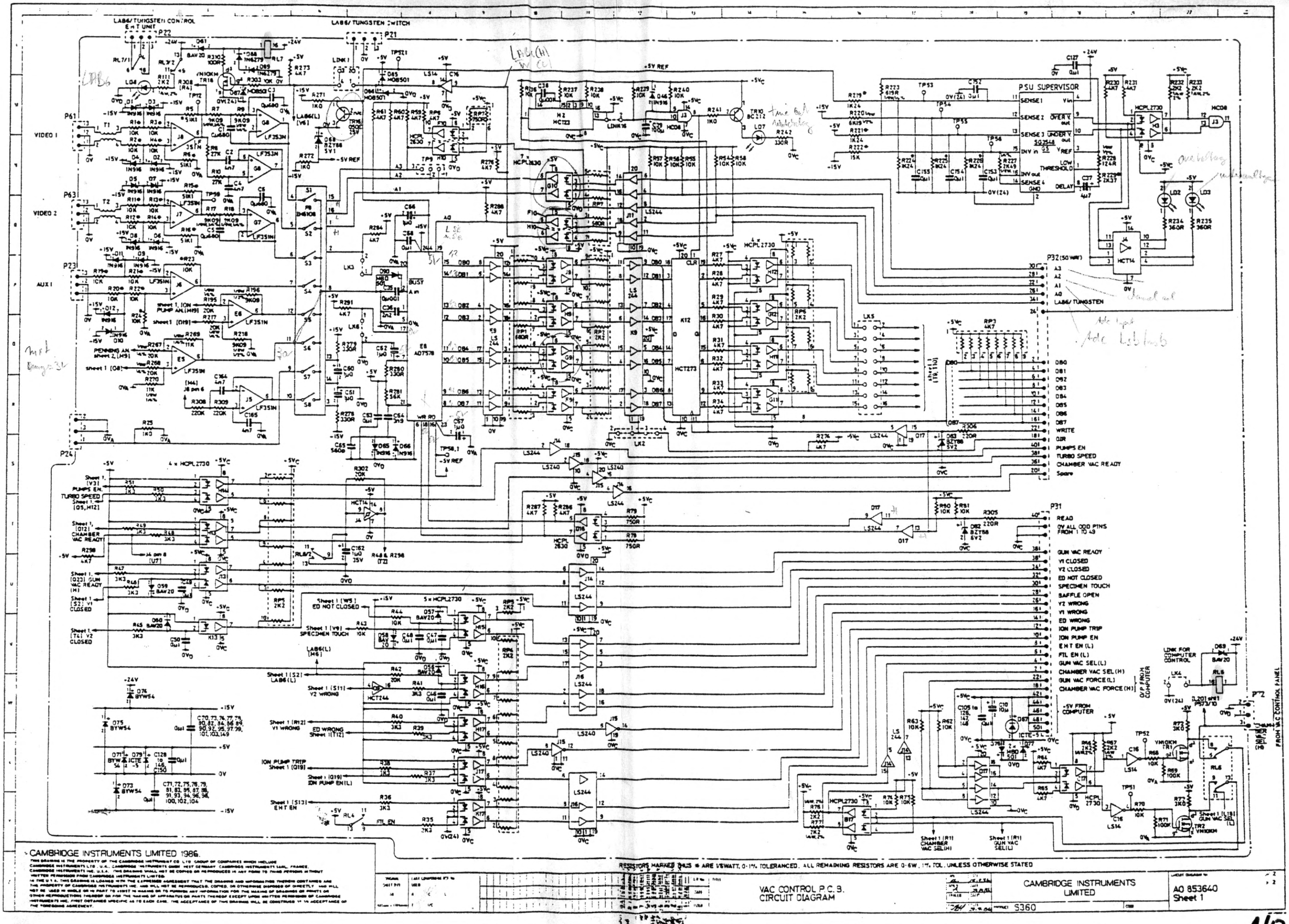
LAB6/ TUNGSTEN CONTROL E.H.T UNIT
LAB6/ TUNGSTEN SWITCH
P22
P21
P61
VIDEO 1
P63
VIDEO 2
P23
AUX 1
P24
P32 (50 WAY)
LAB6/ TUNGSTEN
P31
READ
0V ALL ODD PTNS FROM 1 TO 49
GUN VAC READY
V1 CLOSED
V2 CLOSED
ED NOT CLOSED
SPECIMEN TOUCH
BAFFLE OPEN
V2 WRONG
V1 WRONG
ED WRONG
ION PUMP TRIP
ION PUMP EN
E.H.T EN (L)
FIL EN (L)
GUN VAC SEL(L)
CHAMBER VAC SEL(H)
GUN VAC FORCE(L)
CHAMBER VAC FORCE(H)
+5V FROM COMPUTER
O/P FROM COMPUTER
PSU SUPERVISOR
SG3548
LINK FOR COMPUTER CONTROL
FROM VAC CONTROL PANEL
CAMBRIDGE INSTRUMENTS LIMITED 1986.
RESISTORS MARKED THUS * ARE 1/8WATT, 0·1% TOLERANCED. ALL REMAINING RESISTORS ARE 0·6W, 1% TOL. UNLESS OTHERWISE STATED
VAC CONTROL P.C.B. CIRCUIT DIAGRAM
CAMBRIDGE INSTRUMENTS LIMITED
AO 853640 Sheet 1
S360

File:S360CABLES.W20 CABLE BIBLE FOR S360

DRG No A3-910314
ISSUE: 6
DATE: 25 JUNE 91

REFERENCE DRGS: A0-910291 TO A0_910294

CABLE No.	FUNCTION	FROM UNIT	CONNECTOR No.	TYPE	WAYS	TO UNIT	CONNECTOR No.	TYPE	WAYS	DRG No.	OPTN's
1	SCAN,SHIFT,STIG	EO CRATE	SEE CABLE ASSY DRG			COLUMN	SEE CABLE ASSY DRG			A1714429	
2	SCAN,SHIFT,STIG	EO CRATE	SEE CABLE ASSY DRG		6	COLUMN	S508-13	MOLEX	5	A1714429	
3	C1 CONTROL	EO CRATE	PL102o	BURNDY	6	COLUMN	S502-03	SPADES	2	A3714473	
4	C2 CONTROL	EO CRATE	PL102q	BURNDY	6	COLUMN	S504-05	SPADES	2	A3714475	
5	C3 CONTROL	EO CRATE	PL103s	BURNDY	6	COLUMN	S506-07	SPADES	2	A3714476	
6	LINE SCAN	EO CRATE	PL117f	SMB		HRRU	PL601A	SMB		A3714786	
7	FRAME SCAN	EO CRATE	PL120f	SMB		HRRU	PL602A	SMB		A3714787	
8	REC VIDEO	EO CRATE	PL111f	SMB		HRRU	PL604A	SMB		A3714446	
9	REC BRIGHTNESS	EO CRATE	PL112F	SMB		HRRU	PL603A	SMB		A3714447	
10	X COIL RETN	EO CRATE	PL102a	SMB		EO CRATE	PL104e	SMB		A3714430	
11	Y COIL RETURN	EO CRATE	PL103c	SMB		EO CRATE	PL108e	SMB		A3714434	
12	FRAME IN	EO CRATE	PL104a	SMB		EO CRATE	SK119f	SMB		A3714788	
13	FRAME IN	EO CRATE	PL104c	SMB		EO CRATE	SK118f	SMB		A3714436	
14	LINE IN	EO CRATE	PL105c	SMB		EO CRATE	SK116f	SMB		A3714437	
15	LINE IN	EO CRATE	PL105a	SMB		EO CRATE	SK115f	SMB		A3714789	
16	REC CONT	EO CRATE	SK110f	T&B	16	HRRU	SK601A	T&B	16	A3714445	
17	X,Y GUN ALIGN	EO CRATE	SK101o/q	MOLEX	2@5	COLUMN	SK501	MOLEX	10	A3714474	
18	SCAN & CONT	HRRU SCAN	SK619A	MOLEX	15	Z AMP	SK619B	MOLEX	15	A3714790	
19	SCAN & CONT	HRRU SCAN	SK603A	MOLEX	10	DYN FOCUS	SK620C	MOLEX	10	A3714791	
20	LV SUPPLY	EO PSU CRATE	PL817	BURNDY	12	HRRU SCAN	SK604A	MOLEX	10	A3714792	
21	HT SUPPLY	REC REG SUPPLY	SK602B	BURNDY	6	HRRU Z AMP	SK617B	MOLEX	10	A3714493	
22	LV PWR SUPPLY	IMP CRATE	SK269	MAT LOCK	4	STAGE CONTROL	SK513D	MOLEX	5	A3717387	BM
23	EXT. SCANS IN	EO CRATE	SK103f	MOLEX	5	CONSOLE REAR	SK705/6	FLYING LEAD		A3714483	
24	EXT. BLANKING	EO CRATE	SK107f	MOLEX	5	CONSOLE REAR	SK711/2	FLYING LEAD		A3714442	
25	X SCAN IN	EO CRATE	PL101f	SMB	COAX	EO CRATE	PL133g	SMB		A3714438	
26	Y SCAN IN	EO CRATE	PL102f	SMB	COAX	EO CRATE	PL134g	SMB		A3714432	
27	BLANKING	EO CRATE	PL106f	MOLEX	5	EO CRATE	PL136g	MOLEX	5	A3714441	
28	CLK/BLNK	EO CRATE	SK135g	T&B	10	IMP CRATE	SK203n	T&B RIBB	1	A3714448	
29	MONITOR VID	IMP CRATE	PL201h-4h	SMB	4off	CONSOLE REAR	SK702	D TYPE	25	A3714478	2VDUC
30	AUX VIDEO IN	EO CRATE	PL104i	SMB	COAX	CONSOLE REAR	SK707	FLYING L D		A3714453	
31	STORE REC VID	EO CRATE	PL104f	SMB	COAX	IMP CRATE	PL206f	SMB		A3714439	
32	REC VID OVER	EO CRATE	SK108f	MOLEX	3	IMP CRATE	PL210f	SMB		A3714443	
33	CHN1 VID OUT	EO CRATE	PL107i	SMB	COAX	IMP CRATE	PL201q	SMB		A3714455	
34	CHN2 VID OUT	EO CRATE	PL108i	SMB	COAX	IMP CRATE	PL202q	SMB		A3714456	
35	CHN3 VID OUT	EO CRATE	PL109i	SMB	COAX	IMP CRATE	PL203q	SMB		A3714457	
36	CHN4 VID OUT	EO CRATE	PL110i	SMB	COAX	CONSOLE REAR	PL713	BNC		A3714458	
37	XRAY MAP OUT	EO CRATE	SK104j	T&B	26	IMP CRATE	SK204q	T&B RIBB	26	A3714469	
38	D.P DATA DIRECT	IMP CRATE	SK209f	T&B	16	IMP CRATE	SK 204p	T&B RIBB	16	A3714484	
EX38	EXTENDED									A3717900	EXTC
39	DATA LINK	IMP CRATE	SK203p	T&B	50	IMP CRATE	SK203L	T&B RIBB	50	A3714487	
EX39	EXTENDED									A3717901	EXTC
40	NOT REQD										
41	BUFFER OUTPUT	IMP CRATE	SK204l	T&B	16	IMP CRATE	SK208f	T&B RIBB	16	A3714793	
42	CONTROL UNIT	IMP CRATE	SK205l	MOLEX	5	IMP CRATE	SK205n	MOLEX	5	A3714490	
EX42	EXTENDED									A3717902	EXTC

DRG No A3-910314
ISSUE: 6
DATE: 25 JUNE 91

REFERENCE DRGS: A0-910291 TO A0_910294

CABLE No.	FUNCTION	FROM UNIT	CONNECTOR No.	TYPE	WAYS	TO UNIT	CONNECTOR No.	TYPE	WAYS	DRG No.	OPTN's
43	PIXEL CLK OUT	IMP CRATE	SK204o	MOLEX	5	IMP CRATE	SK204n	MOLEX	5	A3714489	
EX43	EXTENDED									A3717903	EXTC
44	LV PWR(EO)	EO PSU	PL814	BURNDY	12	EO CRATE	123-5,7	,153	5	A2714427	
45	LV PWR(LENS)	EO PSU	PL816	BURNDY	12	EO CRATE	SK122/6	AMP	2	A3714428	
46	MON PWR	EO PSU	PL811	BURNDY	3	CONSOLE REAR	SK720	FLYING L	D	A3714423	
47	MONO2 SIGNAL	REAR PANEL	PL703	D TYPE	25	MONO2 MONITOR	CAB47	FLYING L	D	A3714424	2VDUM
48	C3 POWER	EO PSU	PL818	BURNDY	12	EO CRATE	SK104s	BURNDY	6	A3714802	
49	EHT MAINS IP	EO PSU	PL806	BURNDY	6	EHT CRATE	SK900	IEEC	3	A3714422	
50	SCINT PSU	EO PSU	PL803	BURNDY	6	SCINT CRATE	SK605F	IEEC	3	A3714417	
51	IMP PSU	EO PSU	PL804	BURNDY	6	IMP CRATE	CAB51	FLYING L	3	A3714418	
52	FAN POWER	EO PSU	PL810	BURNDY	3	OPT FANS(LINK)	CAB52	FLYING L	3	A3714425	LINK
53	FAN POWER	EO PSU	PL809	BURNDY	3	CONSOLE FAN	CAB53	FLYING L	3	A3714426	
54	EHT CONT	IMP CRATE	SK204j	EURO	64	EHT CRATE ASSY	SK903A	EURO	64	A3714815	
55	SCINT CONT	IMP CRATE	SK210j	T&B	50	SCINT CRATE	SK613A	T&B RIBB	50	A3714816	
56	EO CONT	IMP CRATE	SK203j	EURO	64	EO CRATE	SK103m	EURO	64	A3714817	
57	VAC CONT	PIA BUFFER1	SK701a	T&B	50	VAC CONT C	SK531	T&B RIBB	50	A3714818	
58	VAC CONT	PIA BUFFER2	SK701b	T&B	50	VAC CONT D	SK532	T&B RIBB	50	A3714819	
59	VAC POWER	EO PSU	PL801	BURNDY	6	VAC LOGIC	SK550	BURNDY	6	A3714415	
60	HD AMP2 VID	EO CRATE	PL101j	SMB	COAX	CONSOLE REAR	SK714	OPTION	COAX	A3714462	XAIB
61	VIDEO AUX2	EO CRATE	PL105j	SMB	COAX	CONSOLE REAR	SK708	OPTION	COAX	A3714464	XAIB
62	VIDEO AUX3	EO CRATE	PL106j	SMB	COAX	CONSOLE REAR	SK709	OPTION	COAX	A3714465	XAIB
63	BAFFLE VALVE	BAFFLE VALVE	CAB63	FLYG LD	6	VAC CONTROL	PL552	BURNDY	6	A3714820	CIV
64	VAC CONT POW	VAC CONTROL	PL553	BURNDY	6	VAC FAN	CAB64	FLYING L	3	A3714821	
65	VENT POW	VAC CONTROL	PL555	BURNDY	6	VENT VALVE	CAB65	FLYING L	3	A3714822	
66	TURBO POW	VAC CONTROL	PL556	BURNDY	6	TURBO PUMP	CAB66	OWN CONN		A3714823	
67	ROT PUMP POW	VAC CONTROL	PL557	BURNDY	6	ROTARY PUMP	CAB67	FLYING L	3	A3714824	
68	CHMB VAC SW	VAC I/L PCB	SK562	MOLEX	5	VAC PANEL	CAB68	FLYING L	4	A3714826	
69	ION PUMP CONROL	VAC LOGIC	PL545	BURNDY	6	ION PUMP PSU	SK545	159 SERI	23	A3717385	ICPI
70	CONT PANEL FUNC	VAC/CHMB CONT	SK573	MOLEX	10	VAC PANEL	CAB70	FLYING L	10	A3714829	
71	CHMB VAC SW	VAC/CHMB CONT	SK572	MOLEX	3	VAC PANEL	CAB71	FLYING L	2	A3714828	
72	GUN ISOLATION	VAC/CHMB CONT	SK570	MOLEX	5	ISOLATION V1	CAB72	FLYING L	5	A3714834	ICPI
73	COL ISOLATION	ION PUMP CONT	SK571	MOLEX	5	ISOLATION V2	CAB73	FLYING L	4	A3714835	ICPI
74	EHT I/L	VAC CONT PCB	SK528	MOLEX	3	EHT BACKPLANE	SK908P	MOLEX	3	A3714836	
75	FIL/PM/OPs I/Ls	VAC CONT PCB	SK530	MOLEX	5	EHT BACKPLANE	SK906P	MOLEX	5	A3714838	
76	SCINT I/L	VAC CONT PCB	SK529	MOLEX	3	REG HT SUPPLY	SK603B	MOLEX	3	A3714837	
77	DAISY CHN ASSY	SCINT CRATE	SK623A	EURO	64	SCINT CRATE	S623B/D/E/F-EURO		5@64	A2714840	
78	STAGE CONT1	PIA BUFFER3	SK701c	T&B	50	STAGE CONT ASSY	SK502D	T&B	50	A3714842	8BM
ND79	STAGE CONT2	IMP CRATE	SK209j	T&B	50	STAGE CONT ASSY	SK502E	OPTION	50	A3714843	5AXIS
80	XYZ MOT DRIVE	STAGE CONT I.P	SK503D	T&B	34	STAGE DRIVERS	S501A-C	T&B	3&10	A3714844	8BM
81	X MOTOR DRIVE	STAGE CONT ASSY	PL536A	BURNDY	6	X MOTOR	CAB81	FLY LEAD	6	A3714858	8BM
82	Y MOTOR DRIVE	STAGE CONT ASSY	PL536B	BURNDY	6	Y MOTOR	CAB82	FLY LEAD	6	A3714859	8BM
83	Z MOTOR DRIVE	SAGE CONT ASSY	PL536C	BURNDY	6	Z MOTOR	CAB83	FLY LEAD	6	A3714860	8BM
84	STAGE DRIVE PW	DRIVE X	SK540A	MOLEX	7	STAGE PSU OP	CAB84	TAG STRI	5	A3717324	8BM
85	STAGE DRIVE PW	DRIVE Y	SK540B	MOLEX	7	STAGE PSU OP	CAB85	TAG STRI	5	A3717325	8BM
86	STAGE DRIVE PW	DRIVE Z	SK540C	MOLEX	7	STAGE PSU OP	CAB86	TAG STRI	5	A3717326	8BM
87	PM _+15V	EO CRATE	SK114f	MOLEX		PM HD AMP	CAB87	FLY LEAD		A3717327	

CABLE BIBLE FOR S360

DRG No A3-910314
ISSUE: 6
DATE: 25 JUNE 91

REFERENCE DRGS: A0-910291 TO A0_910294

CABLE No.	FUNCTION	FROM UNIT	CONNECTOR No.	TYPE	WAYS	TO UNIT	CONNECTOR No.	TYPE	WAYS	DRG No.	OPTN's
88	STAGE CRATE PW	VAC CONTROL	PL579	BURNDY	6	STAGE PSU IP	CAB88	FLY LEAD	3	A3717328	8BM
89	VAC LOGIC PW IP	EO PSU	PL802	BURNDY	6	VAC LOGIC	SX551	BURNDY	6	A3717329	
90	GUN EHT CABLE	EHT CRATE	PL944			GUN(+FIL)	CAB90	FLY LEAD		A3717330	
91	GUN EHT CABLE	EHT CRATE	PL945			GUN(FIL-H)	CAB91	FLY LEAD		A3717331	
92	GUN EHT CABLE	EHT CRATE	PL946			GUN(GRID)	CAB92	FLY LEAD		A3717332	
93	-1500V SUPPLY	EHT CRATE	SK901B	MOLEX	7	PM HD AMP	CAB93	FLY LEAD	2	A3717333	
94	TOUCH ALARM	VAC LOGIC	SK558	BURNDY	6	STAGE	CAB94	PET	1	A3717334	
95	NIGHT/DAY MAINS	EO PSU CRATE	PL813	BURNDY	12	VAC & FAN FAIL	C95/702G	F.LD/MO	3	A3717335	
96	LV PW SUPPLY	IMP B/PLANE	SK271	MATELOK	4	USER INTERFACE	SK709U	MATELOK	4	A3717336	
97	12KV SUPPLY	SCINT CRATE	PL608E		2	SCINTALATOR	CAB97	FLY LEAD	2	A3717337	
98	400V SUPPLY	SCINT CRATE	PL603A	PET	2	SCINT CRATE	PL600B	PET	2	A3717338	
99	-132V SUPPLY	SCINT CRATE	PL601B	PET	2	SCINT CRATE	PL604A	PET	2	A3717339	
100	MAINS CABLE	MAINS	CAB100			EO PSU CRATE IP	CAB100			A3717340	
101	SCINT BIAS OP	SCINT CRATE	PL605A	PET	2	SCINT	CAB101	FLYING L		A3717341	
D 102	SCINT BIAS	SCINT CRATE	PL606A	PET	2	OPTION		TO BE DE		A3717342	
103	LaB6/TUNG	VAC LOGIC	PL522	MOLEX	3	EHT ASSY	SK907P	MOLEX	3	A3717343	
104	SCANS	HRRU SCAN	SK605A	MOLEX		CRT SCAN COILS	CAB104	MOLEX		A3717344	
105	CRT GUN SUPPLY	HRRU Z AMP				CRT BASE				A3717345	
106	12KV SUPPLY	SCINT CRATE	SK607E			DYN FOCUS HRRU	CAB106			A3717346	
107	ION PUMP SUPPLY	VAC CONT	SK554	BURNDY	6	ION PUMP	CAB107	IEEC	3	A3717347	ICPI
108	VIDEO SIGNAL	EO CRATE	SK101i	MOLEX		PM HEAD AMP	CAB108	FLYING L		A3717348	
109	AUTO FOCUS	IMP CRATE	PL2051	MOLEX	5	IMP CRATE	PL205n	MOLEX	5	A3717349	
110	JOYSTIK CONT	CONT PANEL3	SK754C	T&B	10	USER INTERFACE	SK712U	T&B RIBB	10	A3717350	
111	DIGIKNOBS1&2	CONT PANEL3	SK753C	T&B	16	USER INTERFACE	SK707U	T&B RIBB	16	A3717351	
112	LCD DISPLAYS	USER INTERFACE	SK704U	T&B	26	CONT PANEL3&4	S751C-D	T&B RIBB	26	A3717352	
113	LED CONTs	USER INTERFACE	SK711U	T&B	20	CONT PANEL1&2	S751A/B	T&B DAIS	20	A3717353	
114	PANEL KEYS	USER INTERFACE	SK702U	T&B	40	CONT PANEL1&2	S752A/B	T&B DAIS	40	A3717354	
115	KEYBOARD SUPPLY	USER INTERFACE	SK703U	T&B	10	KEYBOARD	K/Bd	T&B RIBB	10	A3717355	
116	TRACKER BALL	CONT PANEL4	SK754D	T&B	16	USER INTERFACE	SK715U	T&B RIBB	16	A3717356	
117	DIGI KNOBS3&4	CONT PANEL4	SK753D	T&B	16	USER INTERFACE	SK708U	T&B RIBB	16	A3717357	
118	STAGE LIMITS	STAGE	SK505	D TYPE	15	STASGE CONTROL	SK505D	MOLEX	15	A3717358	8BM
119	68K COMMUNICAs	USER INTERFACE	SK710U/710	EURO	64	IMP & FLPY DISC	SK 201a	EURO	34	A3717359	
120	LED/KEYS	CONT PANEL3	SK752C	T&B	40	CONT PANEL1	SK753A	T&B RIBB	40	A3717360	
121	LED/KEYS	CONT PANEL4	SK752D	T&B	40	CONT PANEL2	SK753B	T&B RIBB	40	A3717361	
122	LCD1 DISPLAY	CONT PANEL3	SK758C	T&B	14	LCD1 DISPLAY		FLY LEAD		A3714994	
123	JOYSTICK	JOYSTICK	JOYSTK	LD	10	CONT PANEL3	SK755C	MOLEX	5	A3714682	
124	MULTI FUNC	DK1	DK1	FLYG LD	10	CONT PANEL3	SK756C	T&B RIBB	10	A3714900	
125	MAC	DK2	DK2	FLYG LD	10	CONT PANEL3	SK757C	T&B RIBB	10	A3714900	
126	FOCUS	DK3	DK3	FLYG LD	10	CONT PANEL4	SK756D	T&B RIBB	10	A3714900	
127	TRACKER BALL	TRACKER BALL	T/BALL	FLYG LD	6	CONT PANEL4	SK755D	T&B RIBB	16	A3717388	
128	BRIGHT/CONTRAST	DK4	DK4	FLYG LD	10	CON PANEL4	SK757D	T&B RIBB	10	A3717368	
129	LCD2 DISPLAY	CONT PANEL4	SK758D	T&B	14	LCD2 DISPLAY		FLYING L		A3714900	
130	HEATER SENSE	HRRU ZAMP	SK622B	MOLEX	3	HTR SENSE RES	CAB130	FLYING L	6	A3714994	
131	NOT REQD										
132	MONO MON SIG	REAR PANEL	SK701	D TYPE	25	MONO MONITOR	CAB132	BNC		A3717372	
133	COLOUR MON SIG	REAR PANEL	SK702	D TYPE	25	COLOUR MONITOR	CAB133	D TYPE		A3717373	2VDUC

DRG No A3-910314
ISSUE: 6
DATE: 25 JUNE 91

REFERENCE DRGS: A0-910291 TO A0_910294

CABLE No.	FUNCTION	FROM UNIT	CONNECTOR No.	TYPE	WAYS	TO UNIT	CONNECTOR No.	TYPE	WAYS	DRG No.	OPTN's
134	NOT REQD										
135	NOT REQD										
136	SYSTEM RESET	IMP BACKPLANE	270/716U	MOLEX	4&3	INLINE CONN	699	ETHER	5	A3717376	
137	SYSTEM RESET	INLINE CONN	699	ETHER	5	RESET BUTTON		FLY LEAD		A3717377	
138	EHT INTLK	VAC CONT	SK534	MOLEX	5	VIEWING PORT	CAB138	FLY LEAD	5	A3717530	CWP
139	PROTECTED EARTH	EHT CHASSIS	900		1	EO PSU	800	EARTH BA	1	A4717545	
140	PROTECTED EARTH	CONSOLE CHASSIS	700		1	EO PSU	800	EARTH BA	1	A4717546	
141	PROTECTED EARTH	HRRU CHASSIS	600		1	EO PSU	800	EARTH BA	1	A4717547	
142	COLUMN GD	STAGE PS RUNNER	500		1	EO PSU	800	STAR PNT	1	A4717548	8BM-9BM
143	ANALOGUE GD	PLITH BLOCK	500		1	EO PSU	800	EARTH PO	1	A4717549	
144	NOT REQD										
145	TURBO GD	TURBO BODY	500		1	PLINTH BLOCK	500	STAR POI	1	A4717551	
146	EXT SCAN RECVID	EO CRATE	PL105f	SMB	COAX	EO CRATE	PL111i	SMB COAX		A3717589	
147	CHN1 VIDEO	EO CRATE	SK103i	MOLEX	3	VAC CONT	SK561	MOLEX	3	A3717590	
148	MONO 1	DISP MIXER1	PL202f	SMB	COAX	CONSOLE REAR	701	D TYPE	25	A3717591	
149	MONO 2	DISP MIXER2	PL202g	SMB	COAX	CONSOLE REAR	703	D TYPE	25	A3717592	2VDUM
150	NOT REQD										
151	POWER IN	EO PSU CRATE	PL818	BURNDY	12	SCM CONTROL	SK501J	BURNDY	4	A3717594	SCM
152	RANGE CONTROL	EO CRATE	SK101i	T&B	10	SCM CONTROL	SK502J	T&B	10	A3717595	SCM
153	SCM LINK	SCM ANALOGUE	SK506H	T&B	16	SCM CONTROL	SK505J	T&B	16	A3717596	SCM
154	TOUCH ALARM OUT	SCM CONTROL	SK504J	MOLEX	3	STAGE CONTR	SK509D	MOLEX	3	A3717597	SCM
155	TOUCH ALARM IN	SCM CONTROL	SK503J	MOLEX	3	VAC CONTROLLER	SK520	MOLEX	3	A3717598	SCM
156	MEASURE O/P	SCM ANALOGUE	PL502H	SMB	COAX	EO CRATE	PL106i	SMB	COAX	A3717599	SCM
157	VIDEO	SCM ANALOGUE	PL501H	SMB	COAX	EO CRATE	PL102i	SMB	COAX	A3717600	SCM
158	SCM ALARM	SCM	CAB158	FLYG LD		STAGE DOOR	CAB158	PET	COAX	A3717601	SCM
159	POWER CATHODO	CATHODO HD AMP	CAB159	FLYG LD	3	EO CRATE	SK163j	MOLEX	3	A3717602	CL
160	-1,5KV	CATHODO HD AMP	CAB160	FLYG LD		EHT CRATE	SK901D	MOLEX	7	A3717603	CL
161	VIDEO CATHODO	CATHODO HD AMP	CAB161	FLYG LD	COAX	CONSOLE REAR	PL717	BNC	COAX	A3717604	CL
162	NOT REQD										
163	NOT REQD										
164	NOT REQD									A3717731	
165	NOT REQD									A3717732	
166	NOT REQD									A3717733	
167	NOT REQD									A3717734	
168	NOT REQD									A3717735	
169	NOT REQD									A3717736	
170	NOT REQD										
171	TOUCH ALARM	VAC CONTROL	SK520	MOLEX	3	STAGE CONT1	SK509D	MOLEX	3	A3717739	8BM
172	24VAC	HRRU SCAN	SK610A	MOLEX	3	EO PSU	CAB172	FLY LEAD		A3717740	
173	MAINS SYNC	HRRU SCAN	SK611A	T&B	10	IMP CRATE	SK206o	T&B	10	A3717741	
174	VIDEO	EO CRATE	PL104i	SMB	COAX	EO CRATE	PL107j	SMB	COAX	A3717742	XAIB
175	EBBU POWER	INLINE CONN	580	ETHER	5	EBBU	CAB175	FLY LEAD		A3717765	EBBU
176	EBBU BLANKING	EO CRATE	SK109f	MOLEX	3	EBBU	PL501k	BELLING	COAX	A3717766	EBBU
177	EBBU-BLNKG RODS	EBBU	CAB177	FLYG LD		EBBU BLNKG RODS	SK503k	ETHER	5	A3717767	EBBU
178	4QBSD VIDEO	EO CRATE	PL103i	SMB	COAX	EO CRATE	PL101k	SMB	COAX	A3717770	4QBSD
179	4QBSD CONTROL	EO CRATE	SK102i	T&B	16	EO CRATE	SK102k	RIBB	16	A3717771	4QBSD

DRG No A3-910314
ISSUE: B
DATE: 25 JUNE 91

REFERENCE DRGS: A0-910291 TO A0_910294

CABLE No.	FUNCTION	FROM UNIT	CONNECTOR No.	CONNECTOR TYPE	WAYS	TO UNIT	CONNECTOR No.	CONNECTOR TYPE	WAYS	DRG No.	OPTN's
180	LV PSU	IMP B/PLANE	PL270	MATELOK	4	DISK DRIVE	DISK	AMP	4	A3717772	
181	X SCAN ROTN	EO CRATE	PL106e	SMB	COAX	EO CRATE	PL102a	SMB	COAX	A3717776	
182	Y SCAN ROTN	EO CRATE	PL110e	SMB	COAX	EO CRATE	PL102c	SMB	COAX	A3717777	
183	NOT REQD									A3717780	
184	NOT REQD									A3717781	
185	IMP FANS	IMP FANS	CAB185	FLYG LD		EO PSU	PL812	BURNDY	3	A3717854	
186	EARTH	IMP CRATE	200	RING	1	EO PSU	800	RING	1	A3717905	
187	EARTH	SCINT CRATE	600	RING	1	EO PSU	800	RING	1	A3717906	
188	EARTH	CONTROL PANEL	750	RING	1	EO PSU	800	RING	1	A3717907	
189	DOT MAP SIGNAL	X-RAY DOT MAP	CAB189	FLYG LD		EO CRATE	SK111j	D TYPE	10	A3717909	DOTMAP
190	DOT MAP SIGNAL	X-RAY DOT MAP	CAB190	FLYG LD		EO CRATE	PL110j	SMB	COAX	A3717910	DOTMAP
191	EARTH	STAGE CONTROL	500	RING	1	STAGE PSU RUNNER	500	RING	1	A3717908	8BM-9BM
192	EARTH	CHAMBER	500	RING	1	PLINTH BLOCK	500	RING	1	A3717916	
193	EARTH	HRRU CHASSIS	600	RING	1	HRRU CHASSIS	600	RING	1	A3717917	
194	T/BALL(LINK)	CONT PCB4	SK754d	T&B	16	EXT MODE PCB	SK702e	RIBB	16	A3717921	LINK
195	T/BALL(LINK)	USER INTERFACE	SK715u	T&B	16	EXT MODE PCB	SK701e	RIBB	16	A3717922	LINK
196	VAC CONTROL	IMP CRATE	SK206j	T&B	50	PIA BUFFER1	SK702a	RIBB	50	A3717924	
197	VAC CONTROL	IMP CRATE	SK205j	T&B	50	PIA BUFFER2	SK702b	RIBB	50	A3717925	
198	KEYBOARD(LINK)	USER INTERFACE	SK706U	T&B	10	KEYBOARD(LINK)	K/Bd	D TYPE	9	A3717926	LINK
199	STAGE CONTROL1	IMP CRATE	SK208j	T&B	50	PIA BUFFER3	SK702c	RIBB	50	A3717928	8BM
200	HI-RES SYNC	IMP CRATE	SK203i	MOLEX	5	IMP CRATE	SK207o	MOLEX	5	A3717944	2VDUH
201	HI-RES CLOCK	PHASE LOCK LOOP	PLL	BNC	COAX	IMP CRATE	SK201i	SMB	COAX	A3717945	2VDUH
202	PHASE PW/CLKS	PHASE LOCK LOOP	PLL	D TYPE	9	IMP CRATE	SK204i	MOLEX	7	A3717946	2VDUH
203	HI-RES VID/SYNC	IMP CRATE	205i/202i	MOLEX/	SMB	CONSOLE REAR	PL703	D TYPE	25	A3717947	2VDUH
204	MONITOR CABLE	HI-RES MONITOR	HRRM	D TYPE	9	CONSOLE REAR	SK703	D TYPE	25	A3717948	2VDUH
205	EARTH	VAC LOGIC	500	RING	1	EO PSU	800	RING	1	A3717950	
206	EBBU POWER	EO CRATE BP	121/124		4	INLINE CONN	580	ETHER	5	A3717960	EBBU
207	EXT MODE SWG	EXT MODE PCB	SK703E	MOLEX	3	CONSOLE REAR	719	BNC	1	A3717964	XAIB
208	DOT MAP	EO CRATE	PL110j	SMB	COAX	CONSOLE REAR	PL706f	SMB	COAX	A3717992	WDX
209	LINE SCAN	EO CRATE	PL106j	SMB	COAX	CONSOLE REAR	PL705f	SMB	COAX	A3717993	WDX
210	EDX/WDX SELECT	EO CRATE	SK102j	T&B	10	CONSOLE REAR	SK701Ff	T&B	10	A3717994	WDX
211	STANDBY/OPERATE	FAN FAIL PCB	SK703g	MOLEX	3	FRONT PNL OP SW	SK758b	MOLEX	3	A3718011	
212	FAN SENSOR	CONSOLE FAN	CAB212	FLY LEAD	3	FAN FAIL PCB	SK701g	MOLEX	3	A3718012	
213	LINK	FAN FAIL PCB	SK704g	T&B	10	LINK TEMP PCB	SK604g	T&B	10	A3718013	LINK
214	CATHODO/VIDEO	CONSOLE REAR	PL717	BNC	COAX	EO CRATE	SK102j	SMB	COAX	A3718031	XAIB
215	SPARE VIDEO	CONSOLE REAR	PL718	BNC	COAX	NOT USED				A3718048	
216	LINK COOL FAN MA	LINK OPT FAN		BURNDY	3	LINK CRATE FANS				A3718058	LINK
217	LINK COOL RETRO	SNAIL FAN			3	LINK FAN ASSY			3	A3718063	LINK
217										A3718242	RETRO
218		EUC STAGE	CAB218	ETHER	5	VAC INTERLOCK	566	MOLEX	5	A3718279	9EUC
219	EHT INTERLOCK	VAC CONTROL	SK534	MOLEX	5	VIEW PORT EAR	CAB219	FLY LEAD		A3718340	9CWPRHE
220	POWER	EHT UNIT	SK901s	MOLEX	5	EHT BACKPLANE	SK901p	MOLEX	5	A3718385	
221	POWER	EHT UNIT	SK902s	MOLEX	7	EHT BACKPLANE	SK902p	MOLEX	7	A3718386	
222	CAMERA AUTOLINK	35mm CAMERA				DISC DRIVE	DISC P	LEMO	3	A3718207	25mm CAM
223	PANEL AUTOLINK	DISC DRIVE	DISC/S	LEMO	3	HRRU SCAN CONT	(Fits into 0603A019)			A3718208	35mm CAM
224	CAMERA AUTOLINK	C120 CAMERA				DISC DRIVE	DISC P	LEMO	3	A3718438	C120 CAM

Interfacing Cambridge SEM's to External Equipment.

Section 1.	S360 Signal Inputs.	Page	2.
2.	S360 Signal Outputs.	Page	5.
3.	Connecting an Independant An10000 system.	Page	6.
4.	Checking and Setting up the SEM / AN10000.	Page	7.
Appendix A.	S360 / An10000 Interconnections chart. (Integrated system).	Page	A1.
Appendix B.	S360 / An10000 Interconnections chart. (Stand - alone system).	Page	B1.
Appendix B1	S120-S240 / An10000 Interconnections chart	Page	B2.
Appendix C.	S360 / Kevex Delta Interconnections chart.	Page	C1.
Appendix D.	The Link Microscope Digital Interface (MDI 1585)	Page	D1.
Appendix E.	The Kevex Analogue Interface (4850S).	Page	E1.

Section 1.

External Input Scources for S360.

A brief description of the available inputs for connection to external signal scources.

AUX1. (Not available if VPU2 (XAIB) is fitted).
Accessed via Console Rear Panel, or VPU1 (853504) SK4 internally.

This is a simple analogue input, set up for a video signal of 0 - 1V amplitude, for peak white. No control of brightness or contrast is possible by the S360, and therefore adjustment of these levels must be carried out at the unit providing the signal. When VPU2 (XAIB) is fitted, the VPU2 inputs are cascaded through this input under software control, and is therefore not available for use when VPU2 is installed.

AUX2. (Only available if VPU2 (XAIB) is fitted).
Accessed via Console Rear Panel, or VPU2 (853548) P5 internally.

This input is of the same format as AUX1, and the same video levels apply. To select this input, the instrument must be configured for Second video processor (Config 'C', Vid Proc Boards = 2). The Title of this input may be changed by overwriting the legend on Config 'A' with an appropriate title of up to 5 letters. The input is then available on the RIGHT video channel. When an EDX system is installed, this input is usually used for the REPLAY function. (The dump of EDX result sheet or image buffer contents to the SEM camera system.)

AUX3. (Only available if VPU2 (XAIB) is fitted).
Accessed via Console Rear Panel, or VPU2 (853548) P6 internally.

This input is of the same format as AUX1, and the same video levels apply. To select this input, the instrument must be configured for Second video processor (Config 'C', Vid Proc Boards = 2). The Title of this input may be changed by overwriting the legend on Config 'A' with an appropriate title of up to 5 letters. The input is then available on the RIGHT video channel.
When an EDX system is installed, this input is usually used for EDXL (X-Ray Line Scan).

MAP IN. (Only available if VPU2 (XAIB) is fitted).
Accessed via Window Input Panel (XWIP 717755) if fitted, or VPU2 (853548) P10 internally.

This is a TTL level digital input. This input is usually reserved for EDX single element and X-Ray concentration Dot Maps. When EDXM is selected, a TTL pulse applied to this input will result in a "dot" being acquired into the right video store in a cumulative manner. See EDXM function.
This input is also accessed via the EDX4 facility, which provides a cumulative Dot Map on the right channel whose grey level (or colour, if so equipped,) is dependant on the number of pulses inputted per display pixel. See EDX4 function.

WINDOWS. (Only available if VPU2 (XAIB) is fitted).
Accessed via Window Input Panel (XWIP 717755) if fitted, or VPU2 (853548) P11 internally.

This is a 7 input, TTL level, digital input specifically intended for multi-element Dot Mapping in conjunction with an EDX system. Each input, when driven by a TTL pulse, will display a "dot" of a different grey level or colour depending on whether the system is equipped with a colour display or not. This feature is activated by the EDX1 function on the right channel. See EDX1 function.

RBSD / SE2. (Only available if VPU2 (XAIB) is fitted).
Accessed via Console Rear Panel.

This is an analogue input with a sensitivity of 50mV for peak white. This input is specifically intended for use with a scintillator back scattered electron detector such as a Robinson BSD, or with a second Secondary Electron Detector. It works in exactly the same way as the SE1 input. If this input is used for a purpose other than RBSD, it must be remembered that the input level is only 50mV, and that contrast (backoff) adjustment only is available. This is because brightness adjustment is carried out by adjusting the PM voltage associated with this input. The PM supply is an option supplied when RBSD is ordered. If another Signal scource is used, the unit providing the signal must be capable of adjusting the gain of the signal.

CATHODO. (Only available if VPU2 (XAIB) is fitted.
Accessed via Console Rear Panel.

This is an analogue input that is identical in operation to the RBSD input. The hardware has a DAC gain control, but this is not used by the current software, and the signal gain is controlled by the PM voltage set. The PM supply is an option supplied when Cathodo is ordered.

LINE SCAN. & FRAME SCAN.
Accessed from Console Rear Panel, or ESIF (853378) P3 internally.

These inputs are provided to enable an external piece of equipment to drive the SEM column and record unit scans, in order that images may be acquired, and photos dumped under the control of external equipment. This input is usually used by an EDX for "IMAGE ACQ" and "REPLAY" facilities.
To activate the external scan control, the SEM must be switched into "EXTERNAL" mode. This may be done in two ways:-
1. By selecting "EXTERNAL" on Config 'C',
2. By setting the soft switch on the External Mode PCB (854272) PL3. This method is generally reserved for use of an Integrated Link system, and no attempt to use this facility should be made without reference to Tech Support.

The Scan values required for a correct image or photo of 4X5 format are as follows:-

Line Scan & Frame Scan are both +10v -> -10v ramps.
Note.
1. The correction for the 4X5 format is carried out after this stage. Therefore, although the Scans have an equal value, the resulting raster will have a 4X5 format.
2. The above is a nominal value, and provision should be made for a +/- 0.5 V. adjustment on the incoming signal, to enable exact set up of the raster.
3. Most EDX systems work with a square scan format, therefore the Line Scan will need to be attenuated to approximately +/- 8V to retain the square format required.

STROBE.
Accessed via Console Rear Panel, or ESIF (853378) P7 internally.

The purpose of this input is to provide photo brightness control when dumping images from external equipment. (Usually an EDX system). The input is configured for a TTL pulse of around 1 micro second duration, for each display pixel of the scource image. This pulse generates a pulse of constant duration which unblanks the record CRT when an external photo is being dumped. The record CRT is then turned on for a predetermined period per pixel independant of the scan speed, thus giving a photo whose brightness is constant and unaffected by changes in scan speed. It also provides a measure of protection for the record CRT against inadvertant damage through overexposure. See EDX Integration and set up.
NOTE: THIS PULSE IS ENABLE = LOW ie. pulses are negative going.

COMP BLANK.
Accessed via Console Rear Panel, or ESIF (853378) P7 internally.

The Prime purpose of this input is to provide line and frame flyback blanking when using external scans. Enabling the Comp Blank input on P7 pins 1 & 2 unblanks the video to the Record Unit. However, when a Link system is Integrated with the S360, its use is modified. The "PHOTO (L)" signal is applied to P7 pin 2, and the "EXT (H)" signal is connected to P7 pin 1 (as well as EXT MODE PCB P3 pin 1). This acts as a gate which blanks the Record CRT during "IMAGE ACQ", and unblanks the Record CRT during "REPLAY". See EDX Integration Schematic.

Section 2.

S360 Signal Outputs.
A description of signal outputs available from S360.

VID OUT.
Accessed from Console Rear Panel.

This output provides the Secondary Electron video for connection to external equipment. The level is 0 -> 1V for a peak white signal. Its most common usage is to provide a signal for EDX image acquisition, although the signal may be used for any other purpose. In some cases, it may be desirable to output what is being displayed on the SEM screen, such as BSD output. In this case is it is possible to remove the plug that connects VID OUT to VPU1 sk10, and reconnect it to Input pcb (853368) sk6. This will provide the signal of whatever detector is selected on the Display. There is, however, a small offset on this output (~25mV.) and ideally, the equipment receiving the video signal should be capable of adjusting out this offset. (If the signal is being routed to a Link Microscope Digital Interface [MDI], its input ADC has an offset adjustment that is suitable. See Integrated Link set up instructions.

Section 3.

Connecting an Independant AN10000 system.

This section describes how a free standing AN10000 EDX system is connected up with an S360. It presumes that the S360 is fully equipped with XAIB, and that the EDX has the Microscope Digital Interface (MDI) installed.
Cable up the interconnections between the two systems as per Appendix B, align and check the system performance as described in Section 5.

NOTE: The S360 External Scan Interface is designed to interface with a wide range of external equipment. However, to obtain satisfactory results with the REPLAY facility on an independant AN10000 system, it may be necessary to carry out a simple modification to the wiring of the External Interface rear panel.

Remove the panel from the rear of the instrument, and unsolder the co-axial cable from the "COMP BLANK" BNC socket sk711. Resolder the screen of this cable to the INNER of the "COMP BLANK" BNC socket sk711. Solder the INNER of the co-axial cable onto the INNER of the "EXT MODE" BNC socket sk719 IN ADDITION to the existing wire. Operation of the REPLAY function with an independant AN10000 will now be supported.

For an S240 or S120 system, follow the interconnections in Appendix B1.

Section 4.

Checking and Setting up the SEM / AN10000.

This section contains the necessary information to enable an engineer with only basic EDX experience to set up the SEM / EDX system and to check the operation of the links between the two units. It presumes that an XPU is installed in an S120/240, or that XAIB is installed in a S360, and the system is configured properly. i.e., Configure "C" is set VID PROCS = 2, and EDX SYSTEM = YES. It also assumes that the AN10000 system has the Microscope Digital Interface (MDI) installed. If the MDI is not installed, it will not be possible to perform the Image Acquisition and Replay functions.

Basic set up instructions for the SEM and EDX systems:-

Install a specimen into the chamber that comprises two seperate elements. The elements should ideally be laid out in such a way to provide good line scans and dot maps. A nickel calibration grid on a plain aluminium stub is ideal for this purpose. Pump the system and switch on the SEM and EDX system. In order to start up the EDX system, it will be necessary to press the "AUTOLOAD" button for the EDX system, and select "ANALYSER" on the system menu when the EDX has completed loading. DO NOT USE THE PRIMARY ANALYSER PROGRAMME.

While the Analyser programme is loading, obtain a beam on the SEM at 25Kv, 100pA/Spot Size 6, dependant on the type of SEM in use.

If using a system equipped with a horizontal detector, focus the specimen at 15mm Working Distance, 45degrees Tilt, using the stage controls and the focus controls.

If using a system equipped with a inclined detector, focus the specimen at 25mm Working Distance, 0 degrees Tilt, using the stage controls and the focus controls.

Select a magnification that produces well defined detail of the specimen structure. For instance, if using a mag cal grid, set the magnification to give 3 bars of the grid on the screen in the Y axis. This is normally around 300 times mag.

From the EDX main menu (selected by pressing the BLUE key if not already displayed), select "Set Acquisition" - option 7. From this menu, select "Preset Livetime". The system will display "Preset Livetime 100/ ". The value 100 is the normal default, but may have been reset to another period. This value sets the time the analyser will run for before automatically stopping. As it is necessary to acquire for long periods during the test cycle, it is recommended that this period is reset to 200 secs. This is done by typeing "200" after the prompt "Preset Livetime 100/". Press the GREEN key to accept the new value. Press the BLUE key to return to the analyser screen.

Start analysing by pressing function key 'f1' or selecting option 1 (Acquisition On/Off) from the main menu. At the top right hand side of the EDX screen will be seen the ratemeter output value. This value represents the total X-Ray counts measured by the EDX detector per second. Increase the probe current on the SEM (increase the spot size) until this reading averages around 1500 c/s. At least two peaks will become visible on the analyser screen, dependant on the composition of the sample under test. Use the range controls of the analyser keyboard to keep the amplitude of the spectrum to between 1/2 amd 3/4 of full screen amplitude.

Enter the 'markers' mode by selecting 'f16' from the analyser screen, or option 16 from the main menu. From the 'markers' menu, select option 1 'Specify Z'. At the prompt, enter the abbreviation of the first element contained in the test sample. In the case of the recommended sample, type 'AL', for aluminium, and press the green key to label. The various element markers will now appear on the analyser spectrum. Repeat the process for the second element, in the case of the recommended sample, type 'NI', for nickel. The markers for the second element will now appear on the analyser screen. Press the BLUE key twice to exit from the 'markers' option. Check that the largest peak of the first element lines up with the largest of the markers for that element. Check that the largest of the peaks of the second element lines up with the largest of the markers of that element. If there is any difference between the element peaks and the element markers, the system will have to be recalibrated.

It will be necessary to set up two 'windows' to test the EDX map and line functions. From the analyser screen select 'f6' or select the 'windows' option from the main menu. Using the 'left' and 'right' keys on the analyser keyboard, move the spectrum so that the cursor line down the centre of the analyser screen is just to the left of the largest peak of the first element. Press the GREEN key to start painting the window. Move the spectrum leftwards with respect to the cursor line will cause the part of the spectrum passing the cursor line to be painted red. When all of the peak has been painted, press the BLUE key to finish painting the window. The system will then prompt for a window label. Enter any name of up to four characters, i.e. TE1. Press the GREEN button to accept. The system will then prompt for an efficiency factor, press the GREEN button to accept the default value (usually 1.00). The painted window will now go a brown colour if the process has succeeded. Repeat the process for the largest peak of the second element, the element markers selected earlier will assist in differentiating between the peaks of the separate elements. When the process has been completed, press the BLUE key to return to the main menu or the analyser screen as desired. Terminate the acquisition by selecting 'f1' from the analyser screen or the Acquisition On/Off option from the main menu as necessary.
On the EDX keyboard, press INTERLOCK and AUX2 simultaneously to save the EDX spectrum to the EDX Results Sheet Buffer for later use. The screen will go blank for around 30 seconds while the picture is saved.
Proceed to the EDX function tests as desired.

When the tests are completed satisfactorily, the Markers may be removed via the Markers menu, and the windows may be removed by using the ERASE - WINDOWS option.

S360 EDXL - X-Ray Line Scan.

Function Description:-

In this mode, a single line is scanned across the sample and the amplitude of the X-Ray concentration is displayed in the form of a Line Profile. The Line Scan output from the AN10000 ADC pcb is fed into VPU2 853548 Skt6. This input and mode of operation is enabled by selecting "EDXL" on the Right channel input menu.
When "EDXL" is selected, the Display will complete one full scan, displaying whatever input was previously selected on the Right video channel, ie SE, and then freeze. The Line Profile feature will then be selected in Slow Line Scan mode, with the Line Profile displaying the amplitude of the X-Ray concentration at that part of the specimen being scanned. The part of the specimen being scanned is denoted by the bright-up line on the frozen image, which may be adjusted vertically with the tracker ball.

Note: for best results, ensure that a scan speed TV/128 or slower is selected prior to selection of "EDXL"
Note: When the marker line is set in the visible "SE" area of the display, the background of the profiles is blanked to provide a black background. Unlike "Line Profile" mode, the Line Scan area of the display is NOT unblanked when the Line position marker is moved into the Line Scan area of the display.

EDX set up instructions for S360 EDXL and S120/240 XRay Line Scan mode:-

With the SEM and EDX set up as described in the preceding "Basic set up instructions" proceed as follows:-
The ratemeter output of the EDX is normally set to "ratemeter", ie Total rate measured. It is necessary to set the EDX ratemeter output to "Window" mode. This is accessed from the Set Acquisition menu (f7) on the EDX. Select option 3, "Ratemeter". From the "Ratemeter" menu, select "window". The system will prompt the operator for a window to be selected, using the left and right keys, place the cursor over the window to be used, in the case of the recommended sample, Nickel. When the GREEN key is pressed to accept the window, it will change colour to BLACK. Press the BLUE key to return to the main menu. In the menu, the ratemeter option will now show RATEMETER=NAME, where NAME is the four digit name given when the window was first created. The EDX ratemeter will now output only X-Rays collected within the window set.

S360 EDXL Set Up and Test instructions.

From the SET ACQUISITION menu select option 8, "Line Profiling". On the SEM, select a scan speed of TV/128, and adjust the brightness and contrast for a good quality picture on the monitor. Select the RIGHT video channel, EDXL. The SEM will perform one scan of the image previously selected on the Right channel and Freeze. The system will then automatically enter the Line Profile mode and display the EDX Line Scan in Slow Line Scan mode. Using the scan speed switches, select a scan speed of 15 secs. As the Line traverses the screen, the amplitude of the line will be directly proportional to the output of the EDX ratemeter, which will now be outputting X-Rays collected from within the area of the window selected. In the EDX Line Profiling menu will be displayed two values, Ratemeter sensitivity and Time Constant. These values may be adjusted by using the EDX UP/DOWN and LEFT/RIGHT keys. The Time Constant value is adjusted to provide a 'clean' scan with minimum "noise" without being excessively damped, and the Ratemeter sensitivity is set set to provide the correct scaling for the Line scan.

Set the Ratemeter scale to 2K, and adjust the SEM probe current so that the reading on the ratemeter (top right hand corner of EDX screen reads 2000 counts when the line is traversing the "brightest" part of the specimen.
The amplitude of the Line Scan can be adjusted with R21 on the AN10000 ADC pcb so that the Line Profile just lines up the with the "white" line on the profile display. This control is accessable from the rear panel of the ADC pcb, and is next to the ratemeter output socket. If there is insufficient range to reduce the input signal to a suitable degree, the signal will have to be attenuated with a potential divider to provide the correct signal amplitude.

Take a micrograph of the EDXL display by pressing "Freeze" when the line reaches the end of its scan, and select fast store dump on the SEM. The EDXL display will then be dumped to film. When the test is completed, return the Time Constant setting to 1sec.

Return to the EDX SET ACQUISITION menu by repeated use of the BLUE key. Return the Ratemeter to RATE IN /OUT by selecting the "Ratemeter" option, and setting the ratemeter output to RATE IN/OUT. The ratemeter menu will now display RATEMETER=Rate.

S240 EDX Line Scan Set Up and Test instructions.

From the EDX SET ACQUISITION menu, select option 8, Line Profiling. On the S240, Select XPU input XR2, Video mix control fully clockwise to XPU. Set SEM Scan mode switch to Line, and XPU mode switch to Line. Select VIS3 scan speed. On the XPU panel, set X SIZE to minimum, and set Y SIZE to place the Line over the area to be Line Scanned. It should be noted that during the operation of Line Scan function, Y SIZE operates as Y shift, and X SIZE operates as an amplitude control. Turn the X SIZE control clockwise until the Line Scan is of the desired amplitude. As the Ratemeter bar meter on the EDX screen deflects to the right, as counts increase, so the Line on the SEM display will be deflected vertically. If the Line Scan on the SEM "saturates" before the EDX ratemeter reaches full scale, reduce the signal from the EDX by turning R21 anti-clockwise. This control is accessable from the rear panel of the ADC pcb, and is next to the ratemeter output socket. The EDX Ratemeter Full Scale and Time Constant may be adjusted by use of the EDX UP/DOWN and LEFT/RIGHT keys. A Time constant of 126mS is suggested for use at VIS3 scan speed, and a Time Constant of 1 Second is recommended for use when in RECORD mode.

S360 EDXM - Single Element Dot Map / S120/240 XRay Dot Map modes.

In this mode, the X-Ray counts collected from an EDX window are displayed in the form of a Dot Map. Only counts measured from elements within the window range are displayed. The exact method differs dependant on the type of system and its configuration.

EDX set up instructions for S360 EDXM and S120/240 XRay Dot Map modes:-

Set up the SEM and EDX as described in "Basic set up instructions". Select the "Set Acquisition" option, and from there select the "Dot Mapping" option. From the "Dot Map" menu select "Select Windows" option. With the LEFT and RIGHT keys on the analyser keyboard, move the spectrum so that the cursor line is over the spectrum window from which the map is to be taken. In the case of the recommended sample, place the cursor over the Nickel window. Press green to select, and the window will change colour. Press the BLUE key to escape, and the Menu Highlight will return to the Dot Map menu. Select Start Mapping. The EDX will print the message "About to accumulate Spectrum and start mapping. Continue?" Type "Y". Proceed to the instructions below for the type of system in use. Terminate the Mapping function by pressing the BLUE key. Press option 2 "Erase windows" from the Dot Map menu when the test is complete.

S360 - Single store system.

Set the scan speed to TV/128, and select "Split". With the EDX set up in dot map mode, select EDXM on the right channel. On the Left side of the screen, the instrument will complete one full scan and freeze. The dot map will then start to build up on the right hand side of the screen. Note that the slower the scan speed, the better the dot map. Note also that the dot map will accumulate with every scan and will not be reset at the end of the scan. The EDX manual should be consulted for information on the use of the pulse "limit" and "stretch" commands on the EDX, which are used to improve the appearance and discrimination of the dot map. Selecting and deselecting "freeze" will clear the dot map and start the process afresh. The completed dot map may be photographed by simply selecting a store dump photo. The acquisition will automatically be frozen and the store dump performed.

S360 - Multi-Store operation (with two displays).

The operation of the system in multi store operation is essentially the same as with single store, but with the following differences:-

Select TWO store operation. Continue as with single store operation and it will be seen that the SE image is scanned once and frozen on the Left display, and the dot map accumulated on the Right display. If the Right display is a colour monitor, the dot map will be in red. The SE image or the dot map may be photographed in the normal way by selecting Left (SE) or Right (dot map) store. At this point operation of the two store system has certain advantages. If Keyboard f2 is pressed, the frozen dotmap image will be overlaid over the SE image, with the SE image grey levels being adjusted so that the dot map is readily discernable. If the Right channel monitor is a colour VDU, then the SE image will appear on the colour monitor in black and white, with the dot map overlaid in red. If a Polaroid colour printer is fitted to the colour VDU, these colour results can be recorded.

S240 XRay Dot Map mode.

Set up the EDX as described in EDX Set Up instructions - Basic & Dot Map. On the SEM select VIS3 scan speed, Split Screen, X1 zoom. On the XPU front panel, select RASTER, mix control to XPU, input XR1, Dot Map 1. The SEM should display an SE image in the Left half of the screen, and the Dot Map in the Right half of the SEM screen. As Dot Maps only work well at slow scan speeds, the Dot Map will seem very noisy. To review the actual quality of the Dot Map, it will be necessary to enter Record mode.

In Dot Map 1, each XRay count will appear as a separate "Dot" on the screen. In Dot Map 2 & 4, the system requires 2 or 4 counts respectively to produce a "Dot". These features are intended to reduce stray "Dots" created by electrical noise. The EDX Dot Map STRETCH setting is largely irrelevant as the S120/240 XPU automatically adjusts the pulse size for the scan speed in use. The EDX Dot Map "Limit" setting is adjusted for a good quality Dot Map while limiting Dots created by system noise.

<u>S360 - EDX4 - Single Element Concentration Dot Map.</u>

EDX set up is as for EDXM.

The feature works in essentially the same way as the EDXM function, except that the grey level of the dots is dependant on the number of counts detected by the EDX system, the more counts detected in a particular pixel area, the brighter the dot. This type of map is displayed in four grey levels.

<u>S360 - EDX1 - Multi Element Dot Maps.</u>

In EDX1 mode, up to seven EDX window outputs may be displayed on the S360 displays. The windows are set up on the EDX for different elements and are displayed on the Right channel of the S360 in different grey levels on a monochrome system, and different colours on a system equipped with a colour VDU. When EDX1 is selected on the S360, the system acts in the same way as for EDXM, except that the resulting display shows the different windows set up on the EDX. If the EDX1 mode does not work, it may be that the EDX software is out of date. The S360 may be checked by setting up the EDX for EDXM operation, and selecting EDX1 on the S360. The EDX "Map Out" signal may then be plugged into each window input in turn, and dots of a different grey level / colour should then be displayed on screen. If following this procedure does produce different dots for each input, the fault lays with the EDX, and is probably due to out of date software. If this procedure produces only some dots or no dots at all, then the interconnecting cabling should be checked against the charts in Appendices A & B. It is possible to operate this feature on a single channel monochrome system, but it is much easier to use, and better results obtained, if the system is equipped with two stores and a colour VDU.

Image Acquisition modes.

The Link EDX system, when equipped with the Microscope Digital Interface, is designed to acquire an image from the SEM in order to perform image processsing, analysis and other functions dependant on the software with which the EDX system is equipped. It is therefore necessary to calibrate the interface between the EDX and the SEM.

System Description. When the EDX is set into the image acquisition mode (from the POSITION BEAM menu), an "External" signal is sent to the SEM which automatically disconnects the SEM's scans from the scan processors, and feeds scan signals generated by the EDX to the SEM column via the scan processors. The video generated during this procedure is fed to the EDX system via the SEM "Video Out" socket. This video is then digitised by the EDX and stored in either the EDX Image Buffer, or on the EDX disc drive. This information may then be processed by one of the various EDX software packages.

Set up instructions.

Set up the SEM with a sample that gives a round or square detail at a magnification over 100X. Switch off the SEM data zone, and adjust the SEM magnification until the detail just fills the SEM display in the "Y" direction.

From the EDX main menu, select option 9, POSITION BEAM. From this menu select EXTERNAL, it will be seen that SEM scan stops as the EDX scans take over control. If the SEM data zone is switched back on, it will be seen that EXTERNAL SCAN is displayed in the bottom of the data zone. Select "FIELD OF VIEW". At this point, the EDX monitor will clear, and an SEM image will commence scanning down the top left quadrant of the EDX screen. (The brightness and contrast of the acquired image should be the same as the picture on the SEM screen. If not, it may be adjusted as described in Appendix D - Analogue Input). In this quadrant four corner markers will be displayed which, if left unchanged, would show the outer limits of a zoomed image which would be displayed in the top right quadrant of the screen. If the BLUE key is depressed before this scan is completed, the system will commence a full size scan.

If adjustment of the scans is required, wait until the two quadrant scans have been completed, and adjust the zoom markers to the full quadrant size (X1 zoom) with the "<>" and ">><<" keys. Adjustments may now be made step by step using the controls decribed in Appendix D - Line Scan & Frame Scan. After each adjustment a fresh scan may be initiated by pressing the ">><<" key.

An alternative method is set the zoom cursors to full size and press the GREEN key. This will cause an unzoomed image to be continuously scanned in the top right hand quadrant. The results of adjustments may be viewed in real time.

When the SEM image acquired on the EDX is the correct size and aspect ratio, select CONTROL-OFF from the POSITION BEAM menu to escape from this mode. To assist in proving the REPLAY facility, save the Acquired image to disc in the following way.

Reselect the FIELD OF VIEW option but this time press the BLUE key before the quadrant scans have completed the scan, this will initiate a full scan. Before the full scan has completed, press the GREEN key. This will create a composite image of EDX spectrum display and acquired SEM image. Save the image to disc by pressing INTERLOCK and AUX1 keys together.After a short delay, the display will return. To return the SEM to Internal control, select CONTROL-OFF. The EDX will return to the spectrum display. The image saved to disc will have been saved under the filename "PDR:SCREENDUMP.IM".

Replay.

This function enables an EDX Results sheet (spectrum display), or Acquired image to be dumped to film via the SEM record unit. The EDX picture is fed into an S360 via the AUX2 input (this input may have been renamed "RPlay"), and into an S240 and S120 via the XR3 input on the XPU.

Four types of Image Dump are possible:-

A linear Grey Scale for set up purposes (filename ".L").

EDX analyser Results Sheet (Spectrum Display) (filename ".R").

Contents of the Image Buffer (Acquired Image) (filename ".B").

Acquired Image saved to disc (filename "PDR:SCREENDUMP.IM)

In order to check that this function is operative, the image acquired in the previous test will be photographed using the REPLAY function.

For the purposes of this check it is not necessary for the SEM beam to be running, or the EDX to be analysing. From the EDX main menu select the PROGRAM option (f10). From the PROGRAM menu, select the EXECUTE A PROGRAM option (f19). A warning message appear, advising that all spectrum will be lost, do you wish to continue? Type "Y", the message will clear and a filename will be requested. Type SETDUMP. This action will cause the system to exit from the ANALYSER programme, and enter the SETDUMP programme.

From the SETDUMP main menu, select option 1, "filename". When prompted, type "PDR:SCREENDUMP.IM", and press the GREEN button to accept. Select option "Look Up Table", the default value is ".L". It may be necessary to replace this with "PDR:GREY.LT". Select option "Output Device", and select BRIGHTNESS Replay. (On some issues of EDX software, this may be called AMPLITUDE Replay). "No of Levels" may be 16 or 256.

On the SEM, select the input that the EDX video is connected to (AUX2 on an S360). If using an S360, initiate a 40 second LIVE photo dump. As this is only used to initialise the S360 record brightness control system, this record scan can be immediately terminated.

If using an S120 or S240, select input XR3 and Record-Slow. Expose a film in the SEM camera and from the EDX Setdump menu, select option 10, "Perform Dump". The EDX system will prompt "press any key to start dump". Therefore press a key and wait for the photo dump to complete. The SEM will go into the EXTERNAL mode while the photo is being dumped. When the photo dump is complete, the EDX will again prompt for any key to be pressed to terminate the photo dump. The resultant photograph should show the image saved to disc in the previous test. If the brightness of the photo is incorrect, set up the brightness as described in the "The Link Microscope Digital Interface" - Analogue Out.

NOTE: In some cases, it may be necessary to increase the video output fron the Link MDI board to 1.5 volts to achieve the correct exposure.

When the photo dump is of an acceptable quality, exit from the SETDUMP programme by using the BLUE key on the EDX system. The system will then return to the main analyser programme.

Appendix A - S360 / AN10000 Interconnections Chart.

FOR S360 WITH INTEGRATED AN10000 SYSTEM.

AN10000 with MDI pcb Function	Conn type		S360 CONNECTIONS		Conn. Type
Line Scan	LEMO	inner	Screened cable to VPU2, 853548 PL6		SMB
		outer	(select with AUX3-EDXL)		
Analog in	LEMO	inner	Scr. cable from VPU 1, 853504 PL10 OR from		SMB
		outer	I/P pcb, 853368 PL6.		
Analog out	LEMO	inner	Screened cable to VPU2, 853548 P1 5		SMB
		outer	(select with AUX2)		
External	LEMO	inner	Scr.cable to Ext Mode pcb 854272 PL3 pin1		3 way
		link	(AND to ESIF, 853378 PL7 pin1,inner only)		
		outer		pin3	Molex
Photo	LEMO	inner	Scr. cable to ESIF 853378 PL7 pin 2		5 way
		outer	not connected.		Molex
Replay	LEMO	inner	Scr. cable to ESIF 853378 PL7	pin 3	5 way
		outer		pin 4	Molex
X scan	LEMO	inner	screened cable to ESIF 853378,	pin 1	5 way
		outer	PL3 (with Y scan)	pin 2	Molex
Y scan	LEMO	inner	screened cable to ESIF 853378,	pin 4	5 way
		outer	PL3 (with X scan)	pin 5	Molex
Map Out	LEMO	inner	Screened cable to VPU2, 853548 PL10		SMB
		outer	(select with EDXM)		
Multi	9		To VPU2 853548, Skt11.		9
Element	way	pin 2	EBU2) Red.	(pin 4	way
Windows	"D"	pin 3	EBU3) Yellow.	(pin 3	"D"
		pin 4	EBU4) Green.	(pin 2	
		pin 5	EBU5) Cyan.	(pin 7	
		pin 6	EBU6) Blue.	(pin 6	
		pin 7	EBU7) Magenta.	(pin 5	
		pin 8	EBU8) White.	(pin 8	
		pin 9	RETURN)	(pin 9	

Appendix B - S360 / AN10000 Interconnections chart.

FOR S360 WITH STAND-ALONE AN10000 SYSTEM.

AN10000 with MDI pcb Function	Conn type		S360 CONNECTIONS. (To External Interface Panel unless o/w stated)		
Line Scan	LEMO	inner	AUX 3		BNC
		outer			
Photo	LEMO	inner	Comp. Blank		BNC
		outer			
Analog out	LEMO	inner	AUX 2		BNC
		outer			
Analog in	LEMO	inner	Video Out		BNC
		outer			
External	LEMO	inner	External Mode		BNC
		outer			
Replay	LEMO	inner	Strobe (ensure MDI set for neg-going pulses - Links 13-14)		BNC
		outer			
X scan	LEMO	inner	Line Scan		BNC
		outer			
Y scan	LEMO	inner	Frame Scan		BNC
		outer			
Map Out	LEMO	inner	Skt 1 of XWIP 717755 Window Input Panel OR see Integrated system.		BNC
		outer			
Windows x8	9				
	way "D"	pin 2	EBU2)	(Skt 2	BNC
		pin 3	EBU3)	(Skt 3	BNC
		pin 4	EBU4) To XWIP 717755,	(Skt 4	BNC
		pin 5	EBU5) Window Input Panel	(Skt 5	BNC
		pin 6	EBU6) OR see Integrated	(Skt 6	BNC
		pin 7	EBU7) system chart.	(Skt 7	BNC
		pin 8	EBU8)	(Skt 8	BNC
		pin 9	RETURN)		

Appendix B - S120/S200/S240 - AN10000 Interconnections chart.
(Assumes XPU is Installed)

AN10000 with MDI pcb Function	Conn type	S240 CONNECTIONS. (To XPU panel unless o/w stated)		
Line Scan	LEMO inner / outer		Input XR2	BNC
Photo	LEMO inner / outer	(via Link Interface Box)	Sk224	IDC
Analog out	LEMO inner / outer		Input XR3	
Analog in (S120/240)	LEMO inner / outer	(via T-Piece) (leave existing connection in)	Video Out	BNC
Analog in (S200)	LEMO inner / outer	Solder to Test Point 9. VPU 852576 Solder to ground end of R130.		Flying Lead
External	LEMO inner / outer	(via Link Interface Box)	Sk224	IDC
Replay	LEMO inner / outer	(via Link Interface Box)	Sk224	IDC
X scan	LEMO inner / outer		Ext. Line	BNC
Y scan	LEMO inner / outer		Ext. Frame	BNC
Map Out	LEMO inner / outer		Input XR1	BNC

Appendix C - S360 / Kevex Delta Series Interconnections chart.
This assumes that the S360 has XAIB option fitted.

Kevex Delta Function	Chassis Connector	S360 CONNECTIONS. (To External Interface Panel unless o/w stated)		
Line Scan		AUX 3		BNC
Windows		XWIP 717755 Window Input Panel		
1 (EDXM/4)		EBU1	Skt 1	BNC
2 (EDX1)		EBU2	Skt 2	BNC
3 (EDX1)		EBU3	Skt 3	BNC
4 (EDX1)		EBU4	Skt 4	BNC
5 (EDX1)		EBU5	Skt 5	BNC
6 (EDX1)		EBU6	Skt 6	BNC
7 (EDX1)		EBU7	Skt 7	BNC
8 (EDX1)		EBU8	Skt 8	BNC
Kevex 4850S Interface				
B Out		Comp. Blank		BNC
Z Out		AUX 2 (Replay)		BNC
Z In		Video Out		BNC
A Out		External Mode		BNC
Strobe Out		Strobe		BNC
X Out		Line Scan		BNC
Y Out		Frame Scan		BNC

Appendix D.

The Link Microscope Digital Interface (MDI 1585).

This PCB is designed to interface the Link EDX scans and video signals to the SEM, when the EDX takes control of the SEM. (EXTERNAL mode). It is housed in the EDX card frame, and will interface with a wide range of SEM's. Consequently, the output's can be adjusted over a wide range of values, to suit different types of SEM. A list of it's features follows:-

Line Scan (Xout).
This output drives the SEM Line Column Scans when the SEM is in EXTERNAL mode, under EDX control. The Amplitude and offset of the Line Scan output is adjusted by using RV11 (amplitude) and RV12 (offset). Please note that these controls interact considerably, and it is recommended that the waveform is set to approximately the correct values using an oscilloscope prior to connection to the SEM. Fine adjustment may then be carried out by comparing the acquired image on the EDX with the image obtained on the SEM when in Normal scanning mode. Use an SEM scan speed similar to the EDX acquisition speed when comparing the two images. If the image acquired on the EDX is reversed in the line direction, the Line Scan from the EDX system needs to be inverted. This is achieved by moving the link in link 5/6 to the alternative position. The set-up procedure will then need to be repeated.

Frame Scan (Yout).
This output is set up in a similar way to the Line Scan output, except that RV13 (amplitude), RV14 (offset), and link 3/4 if the acquired image is inverted with respect to the SEM image in Normal Scanning mode.

Analogue In (Video Input).
This input is used for video from the SEM, and is used in the Image Acquisition mode of the EDX. The Incoming video may be adjusted for gain by use of RV3, and any offset present on the signal may be corrected by use of RV4.

Strobe Output (REPLAY).
The purpose of this output is to provide a "strobe" pulse every time a pixel of grey data is sent to the SEM. This pulse corrects the photo brightness by turning on the Record CRT for a set period regardless of scan speed when in REPLAY mode,and protects the SEM record CRT against damage through overexposure. It is used in conjunction with the strobe generated on the SEM External Scan Interface. The polarity of the pulse is controlled by the position of links 13/14, and its amplitude by the position of the links in the collector of TR1. The duration of the pulses cannot be adjusted except by changes in the hardware, and should not be attempted. Adjustment of the pulse duration should not be necessary as it is used to initiate the unblank pulse on the SEM external scan interface which is adjustable.

External (EXT).
This is a digital output used to switch the SEM into "External Scan" mode remotely from the EDX. It is configurable by links 7 & 8 for 0V, +5V, & +12V active. For the S360, a +5V enable signal is required.

Photo.
This is a digital output used to initiate an SEM photo remotely from the EDX, when the SEM is in "External Scan" mode. It is TTL level, and is active LOW.

Analogue Out (Video Out).
This is a video output used when the EDX is configured to output video, (Stored Image, Result Sheet etc) to the SEM record system in REPLAY mode. The video signal should be 0v. for Black level, and +1v for peak white. The amplitude of the signal may be adjusted with RV6, and the offset with RV9. If the brightness of the REPLAY photgraph is still incorrect, adjust SEM strobe pulse on ESIF or XPU to provide correct brightness.

Appendix E - The Kevex Analogue Interface 4850S.

Despite its title as an "Analogue Interface" the purpose of this unit is much the same as the Link "Digital Interface". Its purpose is to interface between the digital EDX console and the analogue stages of the SEM. As with the Link Digital Interface, the 4850S is Hardware programmeable to provide a wide variety of signal configurations, to suit virtually any type of SEM. A description of the available outputs follows.

A Out. - Is used to supply the "EXTERNAL" command to the microscope. The S360 requires a +5V enable. The "A Out" line is link configurable to 0V enable or any DC voltage between -15V and +15V set by pot R56. For S360, ensure link E40 - E41 are made, and pot R56 adjusted for +5V on SKT A Out when "EXTERNAL" selected.

B Out - Is used to unblank the CRT in the SEM during photodump. The output level is link cinfigurable in the same way as "A Out", using links E43 - E44 for +5V out. NOTE! this +5V level is set by the same pot as A Out. This output is connected to S360 "Comp Blank".

Strobe - This pulse output is used to control the photo brightness when performing a "REPLAY" photodump. It works by firing the monostable E1 on the S360 External Scan interface pcb which generates a pulse of a period set by RV1. This pulse then unblanks the record CRT for set period irrespective of scan speed, which provides a photo whose brightness is constant whatever scan speed is selected on the EDX. With the video levels properly adjusted, RV1 is set for a "REPLAY" photo of the correct brightness. If diagonal black dots appear on "REPLAY" photo's, check that the S360 External Scan Interface is up to the latest mod standard. The polarity of this pulse can be set positive going or negative going by selecting config links E54/E53 OR E54/E55. Note that the S360 requires a negative going strobe signal.

X Out - This is the EDX "X" scan waveform for driving the SEM scans when in "EXTERNAL" mode. The shift and gain may be adjusted relative to the SEM scans by using R110 (position) and R98 (gain). The polarity of the waveform may be inverted by changing the positions of the config links E124/125/126. E125 is connected to either E124 OR E126 dependant on the polarity required.

Y Out - This is the EDX "Y" scan waveform for driving the SEM scans when in "EXTERNAL" mode. The shift and gain may be adjusted relative to the SEM scans by using R74 (position) and R62 (gain). The polarity of the waveform may be inverted by changing the positions of the config links E94/95/96. E95 is connected to either E94 OR E96 dependant on the polarity required.

Z Out - This is the EDX video output to the SEM when in "REPLAY" mode. It should be connected to the S360 AUX 3 Input. The video level should be adjusted for 0 - +1V video level using R32 (Z-BRT) and R20 (Z-CONT). The brightness of the SEM photo exposure should then be adjusted with S360 External Scan Interface RV1. If the image is inverted, the polarity of the video from the EDX may changed by adjusting the position of config links E30/31/32. E31 must be connected to either E30 OR E32 depending on the signal polarity required.

Z In - Provides SEM video out to the EDX system when in "EXTERNAL" image acquisition mode. The 0 - +1V signal from the SEM "Video Out" socket is adjusted to the +/- 5V level required by the EDX ADC. This signal is adjusted by using R14 (Shift) and R2 (Gain). The polarity of the signal may be inverted by adjusting the position of config links E4/E5/E6. E5 must be connected to either E4 OR E6 depending on the signal polarity required.

S360 X-RAY MAPPING

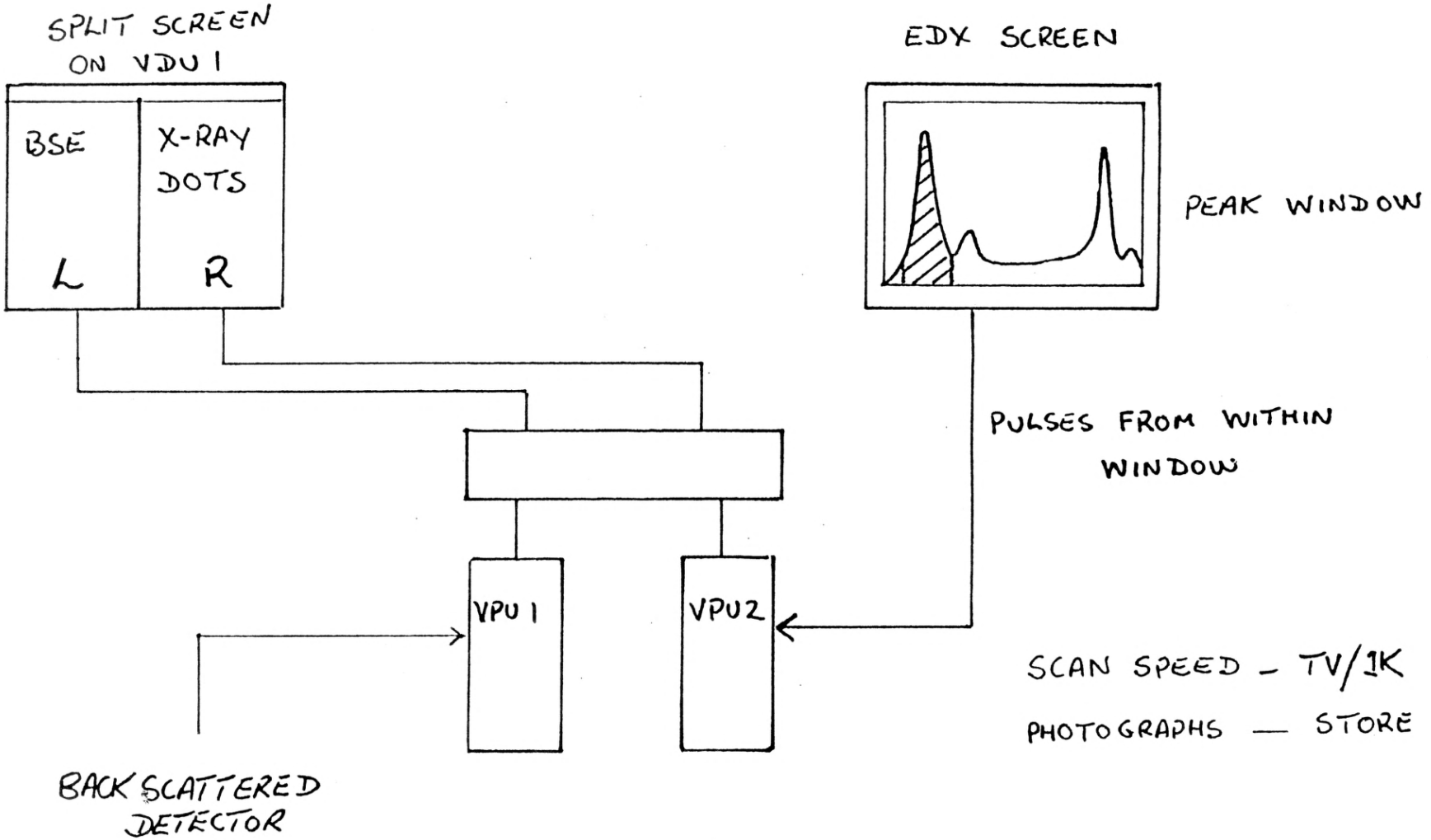

EDXM - PRODUCES A SINGLE ELEMENT DOT MAP WITH DOTS OF UNIFORM INTENSITY, (PEAK WHITE).

S360 X-RAY MAPPING

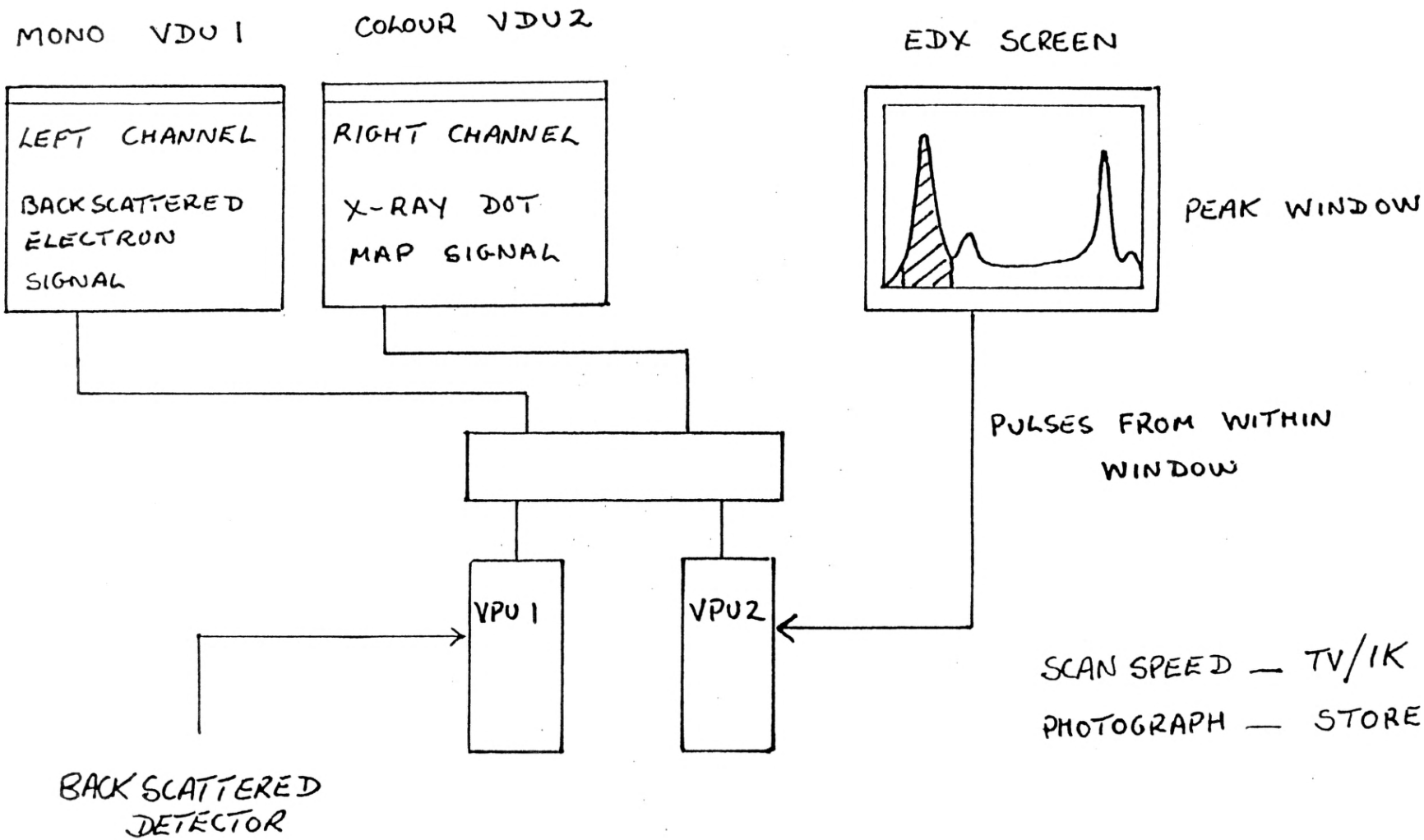

EDXM — IN THIS CONFIGURATION WILL PRODUCE RED DOTS OF UNIFORM INTENSITY ON VDU 2

S360 X-RAY MAPPING

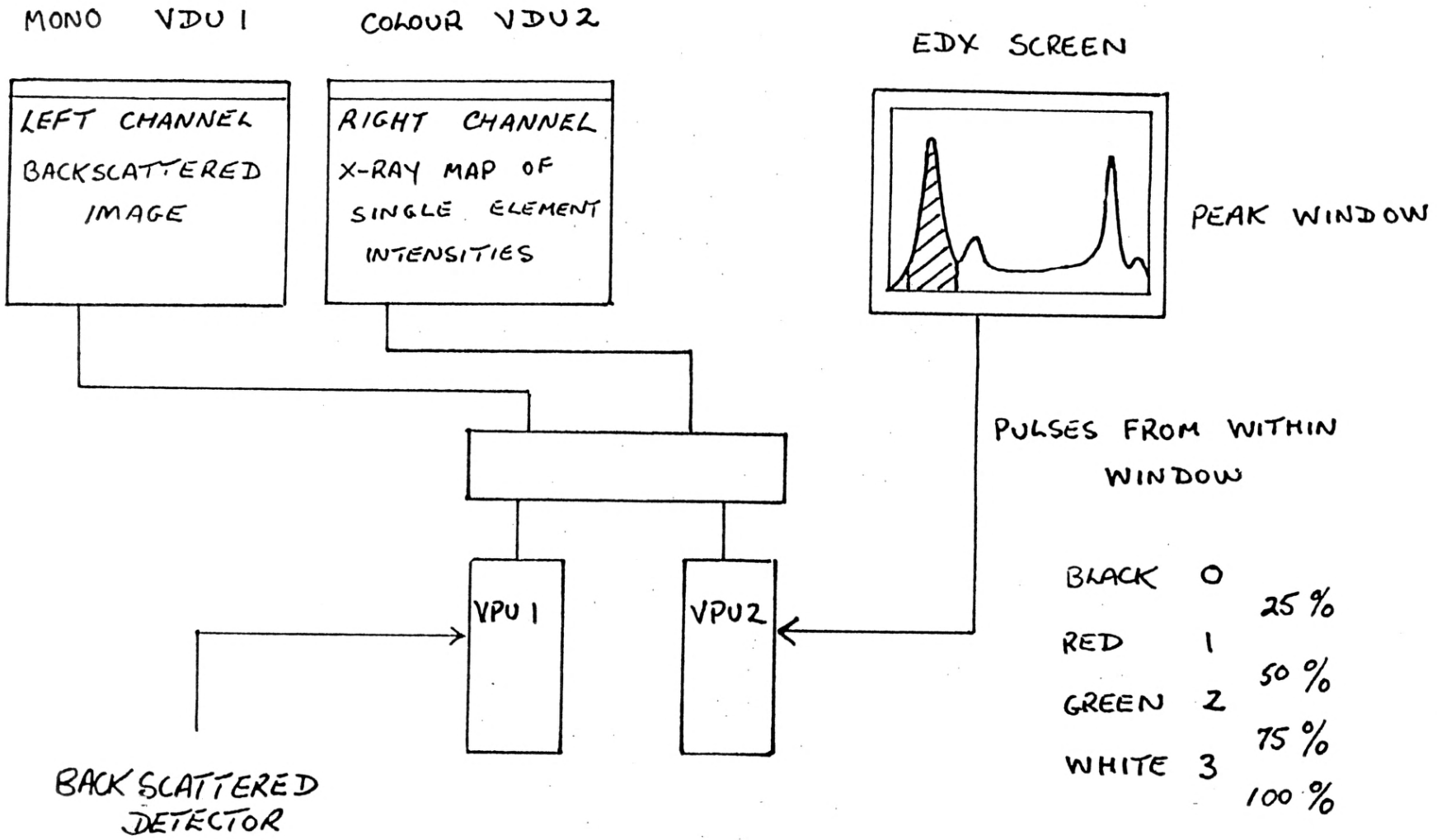

EDX4 — PRODUCES A DOT MAP OF SINGLE ELEMENT INTENSITY, COLOUR CODED ACCORDING TO TABLE 1, I.E. 2 X-RAY PULSES WILL APPEAR AS A GREEN PIXEL.

S360 X-RAY MAPPING

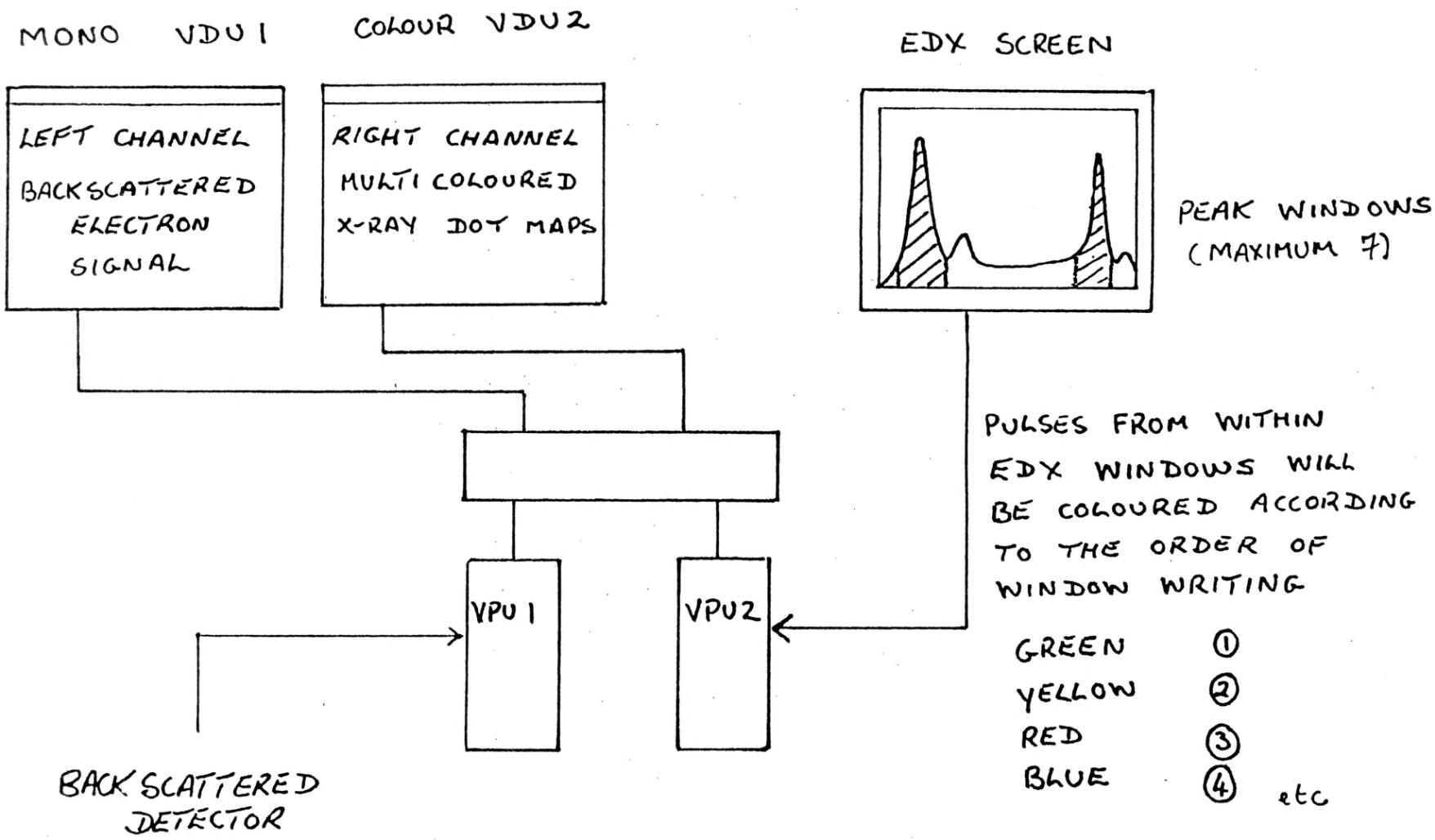

EDX1 – PRODUCES MULTIPLE ELEMENT MAPS WHERE COLOURS CAN BE ASSIGNED TO INDIVIDUAL ELEMENTS.

S360 X-RAY MAPPING

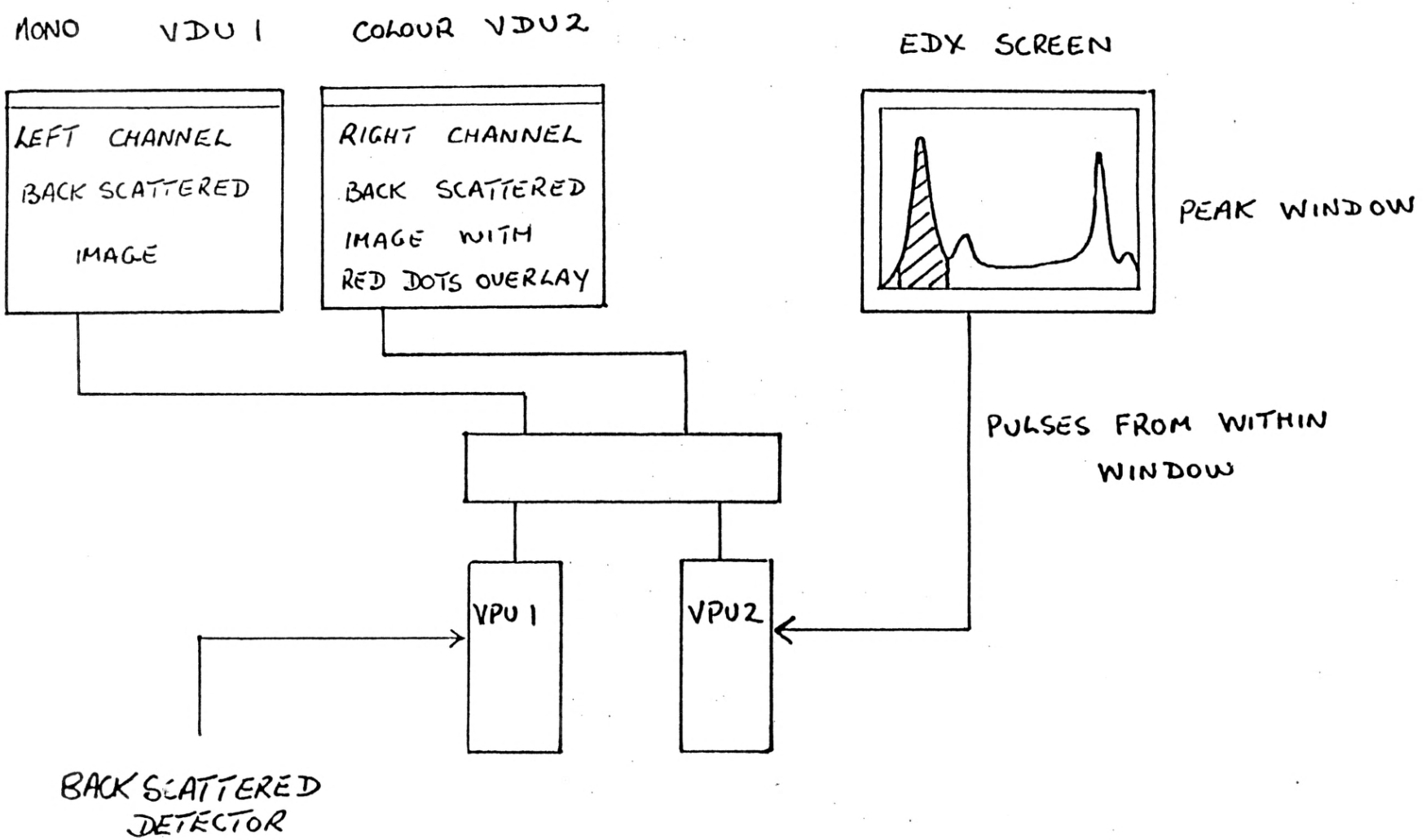

EDXM— OVERLAYS OF RED DOT ON A GREY SCALE IMAGE (VDU2) CAN BE ACHIEVED BY PRESSING "F2" ON KEYBOARD. 2 STORE OR 4 STORE MODE IS REQUIRED.

MULTI ELEMENT DOT MAPS.

INTEGRATED EDX

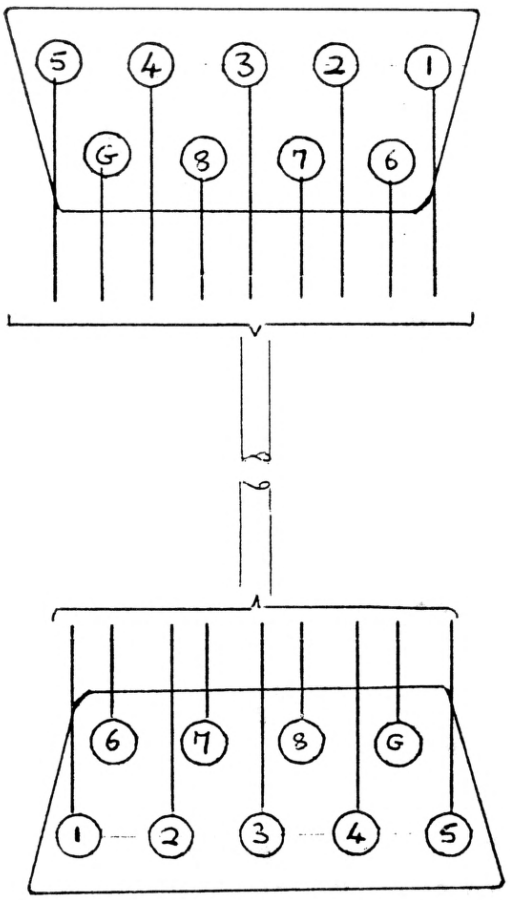

LINK ADC PCB
WINDOWS 1-8

VPU 2 (SKT 11)

TO ENABLE ALL EBU OUTPUTS FROM THE ADC PCB TO BE PROPERLY INPUT TO VPU 2, THE WIRING MUST BE AS SHOWN. LINK AN10 S/W MUST BE 5.16 or later.

Figure 1: Scan Processor V9

File Edit Tools

Z+ Z- Insert Text Axes Grid Autoscale

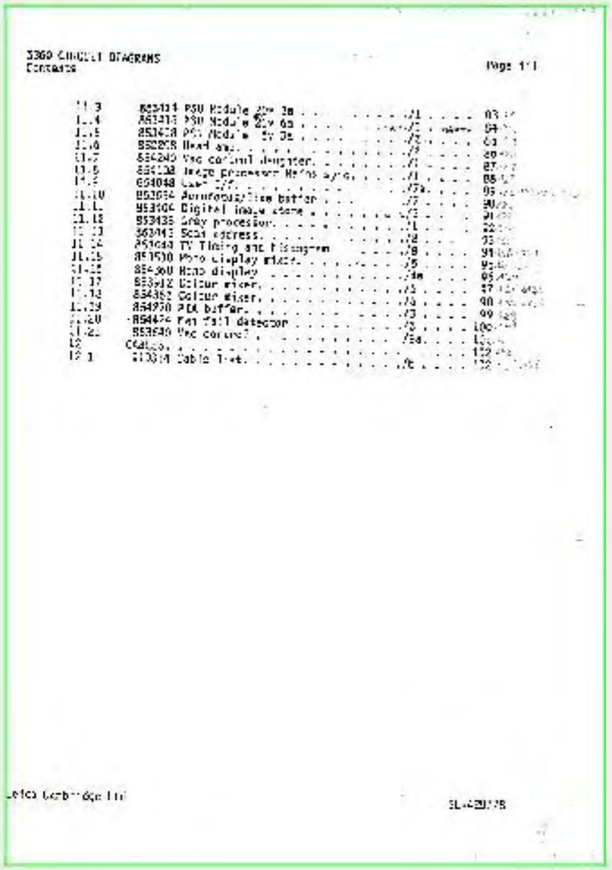

Clear from Top Px

10

Clear from Left Px

25

Clear from Right Px

25

Clear from Bottom Px

10

Lower Threshold

72

Upper Threshold

196

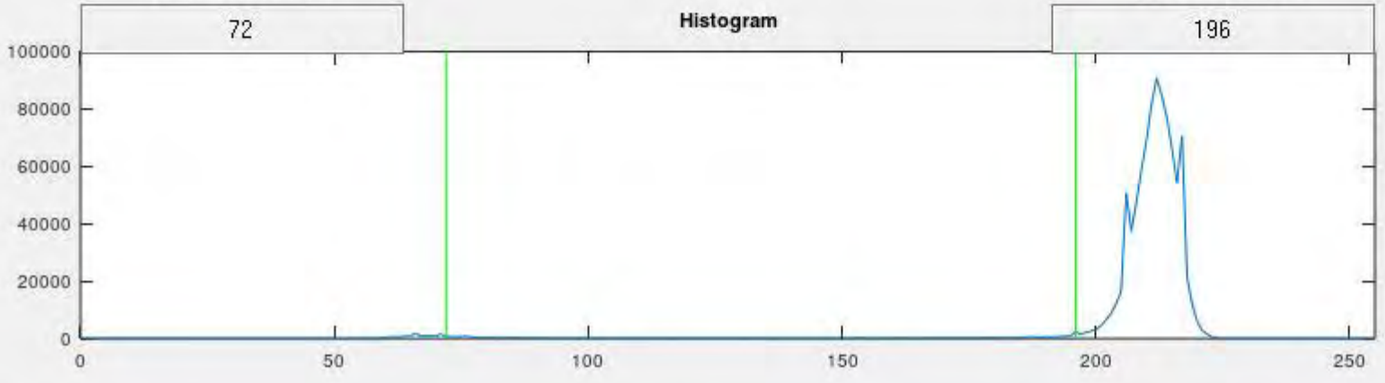

Open File

Update View

proscess

(175.67, 66479)